THE PARK SYNAGOGUE

27500 SHAKER BOULEVARD
PEPPER PIKE, OHIO 44124

SITE DEVELOPMENT PLAN APPROVAL

7/1/2021



LOCATION MAP

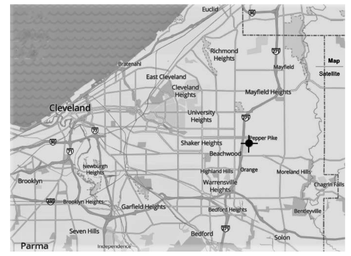

AREA MAP

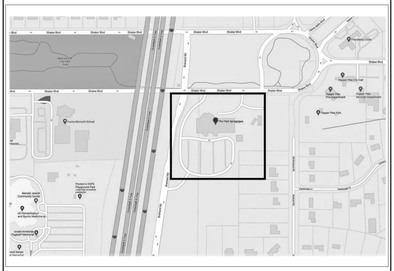

DRAWING LIST

General Information

G0.01	COVER SHEET - SITE PLAN APPROVAL PACKAGE
G1.01	CODE SUMMARY
G1.02	FIRST FLOOR EVERYDAY USE CODE PLAN
G1.03	FIRST FLOOR HIGH HOLIDAYS USE CODE PLAN
G1.04	SECOND FLOOR CODE PLAN
G3.01	EXISTING FIRST FLOOR PLAN
G3.02	EXISTING SECOND FLOOR PLAN
OP1.03	PHASING PLAN 3 OF 6 NOT USED
OP1.04	PHASING PLAN 4 OF 6 NOT USED
OP1.05	PHASING PLAN 5 OF 6 NOT USED
OP1.06	PHASING PLAN 6 OF 6 NOT USED
PH1	PHASING PLAN 1 OF 6 NOT USED

Civil

C1.00	OVERALL SITE PLAN
C2.00	GENERAL NOTES
C3.00	DEMOLITION PLAN
C4.00	GEOMETRIC SITE PLAN
C5.00	SITE UTILITY PLAN
C6.00	OVERALL GRADING PLAN
C6.01	GRADING PLAN ENLARGEMENT
C6.02	GRADING PLAN ENLARGEMENT
C6.03	GRADING PLAN ENLARGEMENT
C7.00	UTILITY PROFILES
C7.01	UTILITY PROFILES
C8.00	DETAILS
C8.01	DETAILS
C8.02	DETAILS
C9.00	DRAINAGE AREA MAP AND STORM SEWER CALCULATIONS
C9.01	STORM SEWER CALCULATIONS AND DETAILS
C10.00	EROSION CONTROL S.W.P.P. PLAN 1
C10.01	EROSION CONTROL S.W.P.P. PLAN 2
C11.00	COMPREHENSIVE STORM WATER OPERATION AND MANAGEMENT PLAN
SV1.00	MAP OF EXISTING CONDITIONS

Landscape

L1.00	OVERALL SITE PLAN
L1.01	COURTYARD AND LOADING DOCK ENLARGEMENT PLAN
L1.02	SOUTH ENTRY COURT REPAIR PLAN
L2.00	OVERALL SITE PLANTING PLAN
L2.10	SOIL PROFILES AND PLANTING DETAILS
L3.00	SITE SECTIONS
L4.00	SITE DETAILS

Architectural

A1.11	OVERALL FIRST FLOOR PLAN
A1.12	ENLARGED SANCTUARY AND PAVILION PLAN
A1.21	OVERALL SECOND FLOOR PLAN
A1.22	SECOND FLOOR ENLARGED PLAN
A1.31	OVERALL ROOF PLAN
A1.32	ROOF ENLARGED PLAN
A3.01	OVERALL EXTERIOR ELEVATIONS
A3.02	EXTERIOR ELEVATIONS - PAVILION

Electrical

ES1.00D	SITE ELECTRICAL DEMOLITION PLAN
ES0.01	SITE LEGEND AND DETAILS
ES1.00	SITE ELECTRICAL PLAN

Technology

TS1.00D	TECHNOLOGY SITE DEMOLITION PLAN
TS1.00	TECHNOLOGY SITE PLAN



CIVIL ENGINEER
DONALD G. BOHNING & ASSOCIATES
7979 PUB PARKWAY
VALLEY VIEW, OH 44125
216-642-1130

LANDSCAPE ARCHITECT
STIMSON
288 NORFOLK STREET
CAMBRIDGE, MA 02139
617-876-8960

STRUCTURAL ENGINEER
GILSANZ MURRAY STEFICEK, LLP
129 WEST 27TH STREET
NEW YORK, NY 10001
212-254-0030

M/E/P ENGINEER
KARPINSKI ENGINEERING
3135 EUCLID AVENUE
CLEVELAND, OH 44115
216-391-3700

ARCHITECT
CENTERBROOK ARCHITECTS AND PLANNERS, LLP
67 MAIN STREET
CENTERBROOK, CT 06409
860-767-0175

KITCHEN CONSULTANT
RICCA DESIGN STUDIOS
515 WASHINGTON STREET
NORWELL, MA 02061
303-621-6327

ACOUSTIC CONSULTANT
ACENTECH INCORPORATED
35 MOULTON STREET
CAMBRIDGE, MA 02138
617-499-8052

LIGHTING CONSULTANT
ATELIER TEN
45 EAST 20TH STREET
4TH FLOOR
NEW YORK, NY 10003
212-254-4500

CODE CONSULTANT
PHILIP R. SHERMAN, P.E.
P.O. BOX 216
ELKINS, NH 03233-0216
603-526-6190

APPLICABLE CODES

- OHIO BUILDING CODE 2017, CONSISTING OF THE 2015 INTERNATIONAL BUILDING CODE (OBC), WITH OHIO AMENDMENTS
- OHIO PLUMBING CODE 2017, CONSISTING OF THE 2015 INTERNATIONAL PLUMBING CODE (OPC) WITH OHIO AMENDMENTS
- OHIO MECHANICAL CODE 2017, CONSISTING OF THE 2015 INTERNATIONAL MECHANICAL CODE WITH OHIO AMENDMENTS
- OHIO ELEVATOR CODE
- OHIO FIRE CODE, CONSISTING OF THE 2015 INTERNATIONAL FIRE CODE (OFC), WITH OHIO AMENDMENTS AND UPDATES
- OHIO BOILER AND PRESSURE VESSEL RULES
- 2015 INTERNATIONAL EXISTING BUILDING CODE, ONLY AS SPECIFICALLY REFERENCED BY THE BUILDING CODE
- 2012 INTERNATIONAL ENERGY CONSERVATION CODE (ADOPTION INCLUDES CHAPTERS 2 THROUGH 5 OF THE COMMERCIAL PROVISIONS, BUT ONLY SECTION 101 OF CHAPTER 1 AND AS FURTHER MODIFIED IN CHAPTER 13 OF THE BUILDING CODE)
- 2015 INTERNATIONAL FUEL GAS CODE
- 2017 NATIONAL ELECTRIC CODE
- 2009 ICC A117.1 ACCESSIBLE AND USABLE BUILDINGS AND FACILITIES
- OCCUPATIONAL SAFETY AND HEALTH ADMINISTRATION
- OTHER CODES AND STANDARDS ARE IN EFFECT AS REFERENCED BY THE ABOVE DOCUMENTS
- 2010 AMERICANS WITH DISABILITIES ACT STANDARDS FOR ACCESSIBLE DESIGN (ADASAD), DOES NOT APPLY AS THIS IS A RELIGIOUS ORGANIZATION

APPLICATION OF THE CODES

- BUILDING CODE

  - WORK IN EXISTING BUILDINGS, AND ADDITIONS TO EXISTING BUILDINGS WILL COMPLY WITH CHAPTER 34 OF THE BUILDING CODE

  - THE WORK WILL COMPLY WITH REQUIREMENTS FOR ADDITIONS AND ALTERATIONS

  - ALL NEW WORK WILL COMPLY WITH THE BUILDING CODE

  - ALTERATIONS AND ADDITIONS WILL COMPLY WITH THE CODE FOR NEW CONSTRUCTION. THE PATH OF TRAVEL TO THE ALTERED AND ADDED AREAS WILL BE ACCESSIBLE THEREFORE COST LIMITS DO NOT APPLY.

- FIRE SAFETY CODE

  THE FIRE CODE IS CONSISTENT WITH THE BUILDING CODE, BUT ADDS SOME ADDITIONAL REQUIREMENTS THAT ARE NOT IN THE BUILDING CODE.

OCCUPANCY CLASSIFICATION (CHAPTER 3)

- BUILDING OCCUPANCIES ARE AS FOLLOWS:

FLOOR	SPACE	CLASSIFICATION
1	KITCHEN	GROUP A-2
	COMMUNITY HALL	GROUP A-2/A-3
	SANCTUARY, LIBRARY, MAIN LOBBY GALLERY, CONCOURSE, PAVILION LOBBY VERANDA LOBBIES	GROUP A-3
	OFFICE AREAS	GROUP B
	SCHOOL	GROUP E
	DAYCARE	GROUP E

- DAYCARE IS PROVIDED FOR CHILDREN OLDER THAN 2 1/2 YEARS, AND FOR YOUNGER CHILDREN ONLY DURING RELIGIOUS SERVICES

GENERAL

- THE PAVILION WILL BE SEPARATED FROM THE EXISTING BUILDING BY A FIRE BARRIER
- THE ADDITION WILL BE REFERRED TO IN TWO PARTS, FOR THE PURPOSE OF THIS REPORT. ADDITION A IS A SMALL ADDITION TO THE EXISTING BUILDING, LOCATED WEST OF THE FIRE BARRIER. ADDITION B IS THE LARGER ADDITION EAST AND NORTH OF THE FIRE BARRIER. BOTH ADDITIONS ARE LOCATED ONLY ON THE FIRST FLOOR.

BUILDING AREA AND HEIGHT (CHAPTER 5)

Area Schedule (Net Building)

Level	Name	Area
FIRST FLOOR PLAN	LEFT EXISTING NET AREA	25710 SF
FIRST FLOOR PLAN	RIGHT EXISTING NET AREA	13185 SF
FIRST FLOOR PLAN	ADDITION B NET AREA	10277 SF
FIRST FLOOR PLAN	ADDITION A NET AREA	287 SF
SECOND FLOOR PLAN	LEFT EXISTING NET AREA	1565 SF
SECOND FLOOR PLAN	RIGHT EXISTING NET AREA	18663 SF

BUILDING AREAS (501.0 - 503.0):

EXISTING BUILDING FIRST FLOOR	39,400 SF
ADDITION A	260 SF
ADDITION B	9,924 SF
RESULTING BUILDING FIRST FLOOR	49,584 SF
EXISTING BUILDING SECOND FLOOR	20,228 SF
RESULTING BUILDING TOTAL AREA	69,812 SF

BUILDING HEIGHT (504):

STORIES — TWO STORIES

FEET — 40 FEET

SPRINKLERS:

- EXISTING AND ADDITION TO BE FULLY SPRINKLERED

OPEN FRONTAGE:

- EXISTING BUILDING WITH ADDITION A

31' OPEN FRONTAGE TO 20 CLEAR SPACE
933'10" OPEN FRONTAGE TO 30' CLEAR SPACE
F= 964'10" TOTAL FRONTAGE ON OPEN SPACE AT LEAST 20' WIDE
P= 1031'10" TOTAL PERIMETER

- EXISTING BUILDING WITH A AND ADDITION B — 100%

CONSTRUCTION TYPE (601): TYPE II-B

- EXISTING BUILDING — TYPE II-B

- ADDITION` — TYPE II-A

TABULAR AREA REFERENCE (506) BUILDING AREA CALCULATIONS:

- THE CODE PERMITS THE BUILDING RESULTING FROM AN ADDITION TO EXCEED THE ALLOWABLE AREA, PROVIDED:

  - A FIRE BARRIER IS INSTALLED BETWEEN THE EXISTING CONSTRUCTION AND ADDITION.

  - THE CONSTRUCTION TYPE OF THE ADDITION IS AS WOULD BE REQUIRED FOR AN OVERALL BUILDING OF THE RESULTING SIZE

- ALLOWABLE HEIGHT, GROUP A/B/E — THREE STORIES, 75 FEET
- ALLOWABLE AREA, EXISTING BUILDING WITH ADDITION A

  - A MIXED SEPARATED OCCUPANCY APPROACH IS USED

  - OPEN FRONTAGE INCREASE

    - W=(31x 20 + 933.83 x 30)/1031.83 = 27.75'

    - If = [F/P-0.25]W/30 = 0.633

  - GROUP A/B FIRST FLOOR ACTUAL — 24,447 SF

  - GROUP A/B FIRST FLOOR ALLOWABLE

    - Aa = [At+(NS x If)] = [28500 + (9500 x 0.633)] = 34,513 SF

TABULAR AREA REFERENCE (506) BUILDING AREA CALCULATIONS: (contd)

- GROUP E FIRST FLOOR ACTUAL — 13,617 SF

- GROUP E FIRST FLOOR ALLOWABLE

  - Aa = [At+(NS x If)] = [43500 + (14500 x 0.633)] = 52,678 SF

- TOTAL FIRST FLOOR ALLOWABLE

  - GROUP A/B ACTUAL/GROUP A/B ALLOWABLE + GROUP E ACTUAL/GROUP E ALLOWABLE< 1.0

  - 24447/34513 + 13617/52678 = .966 < 1.0

- GROUP E SECOND FLOOR ACTUAL — 21,126 SF

  - IGNORE SEPARATED MIXED OCCUPANCY AND TREAT AS ALL GROUP E

- GROUP E SECOND FLOOR ALLOWABLE

  - Aa = [At+(NS x If)] = [43500 + (14500 x 0.633)] = 52,678 SF

- TOTAL ALLOWABLE AREA — EACH STORY TO COMPLY FOR TWO STORY BUILDING

- ALLOWABLE AREA, EXISTING BUILDING WITH ADDITION A AND ADDITION B

  - ALLOWABLE HEIGHT FOR ADDITION B — FOUR STORIES, 85 FEET

  - ALLOWABLE AREA (BASED ON TYPE II-A CONSTRUCTION FOR ADDITION B)

  - IGNORE OCCUPANCY SEPARATION, TREAT AS NON-SEPARATED MIXED OCCUPANCY WITH GROUP A2/A3 MOST RESTRICTIVE

  - OPEN FRONTAGE INCREASE

    - W= 30'

    - If = [F/P-0.25]W/30 = 0.75

  - GROUP A FIRST FLOOR ALLOWABLE

    - Aa = [At+(NS x If)] = [46500 + (15500 x 0.75)] = 58,125 SF

STRUCTURAL FIRE RESISTANCE

STRUCTURAL FIRE RESISTANCE: FIRE RESISTANT RATING OF STRUCTURAL ELEMENTS (602.0):

- STRUCTURAL FIRE RATINGS ARE REQUIRED AS FOLLOWS:

ELEMENT	EXISTING BUILDING WITH ADDITION A TYPE II-B	ADDITION B TYPE II-A
PRIMARY STRUCTURAL FRAME, INCLUDING COLUMNS AND ROOF STRUCTURE CONNECTED TO COLUMNS	NONCOMBUSTIBLE, RATING NOT REQUIRED	NONCOMBUSTIBLE, ONE HOUR RATING REQUIRED
FLOOR CEILING ASSEMBLIES	N/A	N/A
ROOF CONSTRUCTION AND ASSOCIATED SECONDARY MEMBERS NOT CONNECTED TO COLUMNS	NONCOMBUSTIBLE, RATING NOT REQUIRED	HIGH ROOF: NONCOMBUSTIBLE, RATING NOT REQUIRED AS >20 FEET ABOVE FLOOR BELOW
		LOW ROOFS: NONCOMBUSTIBLE, ONE HOUR RATING REQUIRED

- COMBUSTIBLE CONSTRUCTION ELEMENTS ARE PERMITTED ONLY AS PERMITTED BY CODE.

BARRIERS TO FIRE AND SMOKE SPREAD

BUILDING SEPARATION:

- THE ADDITION WILL BE SEPARATED FROM THE EXISTING BUILDING WITH ITS SMALL ADDITION BY A TWO HOUR FIRE BARRIER. THE RESULTING BUILDING IS TREATED AS A SINGLE BUILDING.

- THE FIRE BARRIER IS TO EXTEND FROM EXTERIOR WALL TO EXTERIOR WALL, AND FROM GRADE TO THE UNDERSIDE OF THE ROOF SHEATHING, THROUGH ALL INTERSTITIAL SPACES.

- DOORS ARE TO BE 90 MINUTE DOOR ASSEMBLIES. DUCTS ARE TO BE PROTECTED BY 90 MINUTE FIRE DAMPERS. THE TOTAL OPENING WIDTH IS LIMITED TO 25% OF THE FIRE BARRIER. THE UNFOLDED LENGTH, LOOKING AT EACH SIDE, FROM EACH SPACE MAY BE USED. 550 SF OF WALL AREA X .25 = 138 ALLOWABLE. 127 SF OF OPENING PROVIDED.

- COMPLY WITH THE CODE FOR PENETRATIONS.

- COMPLY WITH THE CODE FOR VOIDS AND JOINTS AT INTERSECTIONS AT EXTERIOR WALLS AND ROOF.

EXTERIOR WALLS:

- FIRE SEPARATION DISTANCE (FSD) IS MEASURED PERPENDICULAR TO EACH BUILDING TO THE LOT LINE.

- BASED ON A FIRE SEPARATION DISTANCE OF MORE THAN 30 FEET, EXTERIOR WALLS ARE NOT REQUIRED TO BE RATED AND OPENINGS ARE NOT LIMITED IN SIZE.

OCCUPANCY SEPARATIONS:

- EXISTING TO REMAIN, REQUIRED TO BE ONE HOUR

CORRIDORS:

- RATING NOT REQUIRED

INCIDENTAL USE AREAS:

- MECHANICAL EQUIPMENT ROOMS WITH EQUIPMENT EXCEEDING THRESHOLDS IN THE TABLE

EGRESS:

- THE EGRESS INFORMATION BELOW IS LIMITED TO THE ADDITION, AND THE ISSUES WHERE ALTERATIONS TO THE LIMITED EXISTING SPACE IMPACTS EGRESS REQUIREMENTS.
- DESIGN OCCUPANT LOADS ARE THE GREATER OF EITHER THE ACTUAL NUMBER OF PERSONS IN THE SPACE OR THE OCCUPANT LOADS BASED ON THE FOLLOWING:

SPACE	FACTOR
SANCTUARY FIXED SEATS	ACTUAL SEAT COUNT
SANCTUARY LOOSE SEATS AND CHAPEL	ONE PERSON PER 7 NET SQUARE FEET
CONFERENCE, COMMON ROOM	ONE PERSON PER 15 NET SQUARE FEET
KITCHEN	ONE PERSON PER 200 GROSS SQUARE FEET
CLASSROOMS	ONE PERSON PER 20 NET SQUARE FEET
ART ROOM	ONE PERSON PER 50 NET SQUARE FEET
COMMUNITY HALL	ONE PERSON PER 7 NET SQUARE FEET WITH FIXED SEAT COUNT FOR BLEACHERS IN OR OUT, WHICHEVER IS WORSE CASE
OFFICE AREAS, STACKS	ONE PERSON PER 100 GROSS SQUARE FEET
STORAGE, MEP	ONE PERSON PER 300 GROSS SQUARE FEET
CIRCULATIONS, LOBBIES, GALLERY, CONCOURSE	NO OCCUPANT LOAD

- OCCUPANT LOADS ARE SHOWN ON THE CODE DRAWINGS

MULTIPLE EXITS/EXIT ACCESS ARE REQUIRED AS FOLLOWS:

- ROOMS AND SPACES WITH MORE THAN 49 OCCUPANTS — TWO

- FROM ROOMS, SPACES AND FLOORS WITH UP TO 500 OCCUPANTS — TWO

- FROM ROOMS AND SPACES WITH 501 - 1000 OCCUPANTS — THREE

- FROM ROOMS, SPACES AND FLOORS WITH MORE THAN 1000 OCCUPANTS — FOUR

TRAVEL DISTANCE TO THE NEAREST EXIT IS LIMITED AS FOLLOWS:

- GROUP A-2 AND A-3 — 250 FEET

DEAD ENDS IN CORRIDORS ARE LIMITED AS FOLLOWS:

- GROUP A-2 AND A-3 — 20 FEET

REMOTENESS OF MULTIPLE EXITS WILL BE 1/3 THE DIAGONAL DISTANCE OF THE SPACE

ACCESSIBLE EGRESS:

- EXISTING TO REMAIN.

- PROVIDED FOR THE ADDITION BY MEANS OF EXTERIOR DOORS TO ACCESSIBLE ROUTES.

- AS MULTIPLE EXITS ARE REQUIRED FROM THE ADDITION, TWO ACCESSIBLE MEANS OF EGRESS ARE REQUIRED.

DOORS:

- MINIMUM CLEAR WIDTH OF DOOR OPENINGS IS 32 INCHES, WITH 0.2 INCHES PER PERSON.

- PROJECTIONS INTO THE CLEAR WIDTH OF LESS THAN FOUR INCHES, BETWEEN 34 AND 80 INCHES ABOVE THE FLOOR, MAY BE IGNORED.

- DOORS SERVING AN OCCUPANT LOAD OF 50 OR MORE ARE TO SWING IN THE DIRECTION OF EGRESS. DOORS SERVING GROUP A-2/A-3 REQUIRE PANIC HARDWARE.

BALANCED EGRESS:

- THE LOSS OF ANY SINGLE EXIT MAY NOT REDUCE THE REMAINING EXIT CAPACITY OR WIDTH TO LESS THAN 50% OF THE REQUIRED CAPACITY OR WIDTH.

MAIN EXIT:

- DURING NORMAL OPERATION, THE MAIN FRONT DOORS ARE REQUIRED TO BE A MAIN EXIT, PROVIDING 50% OF THE EGRESS CAPACITY.

- DURING PEAK OPERATION, THERE IS NO SINGLE MAIN ENTRANCE TO THE BUILDING, THEREFORE A MAIN EXIT IS NOT REQUIRED.

-THERE IS NO SINGLE MAIN ENTRANCE TO THE SANCTUARY, THEREFORE A MAIN EXIT IS NOT REQUIRED.

- A SINGLE MAIN ENTRANCE IS PROVIDED TO THE COMMUNITY HALL, THEREFORE A MAIN EXIT PROVIDING 50% OF THE EGRESS CAPACITY, IS PROVIDED.

INTERIOR FINISH:

INTERIOR WALL AND CEILING FINISH REQUIREMENTS ARE AS FOLLOWS:

OCCUPANCY	STAIRS	CORRIDORS	ROOMS
A-3	B	B	C
B	B	C	C
E	B	C	C

FLOOR FINISHES WILL COMPLY WITH DOC-FF1

ALARM AND SUPPRESSION:

A FIRE ALARM SYSTEM IS REQUIRED TO SERVE THE ENTIRE BUILDING.

- THE SYSTEM IS TO BE INITIATED BY WATERFLOW AND TAMPER DEVICES, SMOKE DETECTION FOR HVAC DUCTS AND ELEVATOR RECALL. ONE MANUAL PULL STATION IS REQUIRED.

- VOICE ALARMS ARE REQUIRED IN ALL AREAS. VISUAL ALARMS ARE REQUIRED IN ALL COMMON AND PUBLIC AREAS.

- THE SYSTEM IS REQUIRED TO REPORT TO THE FIRE DEPARTMENT BY ONE OF THE MEANS LISTED IN THE CODE.

SPRINKLERS:

- THE BUILDING WILL BE FULLY SPRINKLERED

STANDPIPES — NOT REQUIRED

FIRE EXTINGUISHERS:

- PORTABLE FIRE EXTINGUISHERS ARE REQUIRED IN ALL WORK AREAS, SPECIAL HAZARD AREAS.

RADIO COVERAGE:

- EMERGENCY RESPONDER RADIO COVERAGE IS REQUIRED FOR THE ADDITION AND MAY BE REQUIRED FOR THE EXISTING BUILDING..

CARBON MONOXIDE:

- CARBON MONOXIDE DETECTION IS REQUIRED FOR THE SCHOOL.

LIGHTING AND SIGNAGE:

- EMERGENCY LIGHTING IS REQUIRED FOR ALL EXITS, CORRIDORS, AISLES IN ROOMS REQUIRING MORE THAN ONE EXIT, ELECTRICAL EQUIPMENT, FIRE PUMP AND GENERATOR ROOMS, PUBLIC RESTROOMS > 300 SF, AND THE EXIT DISCHARGE AT THE FACE OF THE BUILDING.

- EXIT SIGNAGE IS REQUIRED IN CORRIDORS AND SPACES REQUIRING MULTIPLE EXITS.

- LOW LEVEL EXIT SIGNS AND EGRESS PATH MARKINGS ARE NOT REQUIRED

- EMERGENCY POWER IS REQUIRED FOR EGRESS LIGHTING, EXIT SIGNS AND FIRE ALARMS

FIRE DEPARTMENT ACCESS ROADS:

- FIRE DEPARTMENT ACCESS ROADS ARE BEING REWORKED TO PERMIT THIS ADDITION, AND COMPLY FOR THE ENTIRE BUILDING.

- EXTEND TO WITHIN 150 FEET OF THE EXTERIOR WALL AT GRADE, OR INCREASED DISTANCE AS APPROVED BY FIRE CODE OFFICIAL.

- REFER TO FIRE CODE FOR THE DETAILS OF ACCESS ROAD CONSTRUCTION.

PLUMBING FIXTURE COUNTS:

PLUMBING FIXTURE FACTORS ARE AS FOLLOWS:

Occupancy	Male WC	Female WC	Male Lav	Female Lav	Drinking Fountain	Service Sink
GROUP A-2/A-3	1 PER 75	1 PER 65	1 PER 200	1 PER 200	1 PER 500	1 WITHIN 500 FEET
GROUP A-3	1 PER 125	1 PER 65	1 PER 200	1 PER 200	1 PER 500	
GROUP B	1 PER 25 FOR THE FIRST 50, THEN 1 PER 50		1 PER 40 FOR THE FIRST 80, THEN 1 PER 80		1 PER 100	
GROUP E	1 PER 50	1 PER 50	1 PER 50	1 PER 50	1 PER 100	

- AS THE OCCUPANT LOAD OF THE SANCTUARY IS BEING INCREASED, FIXTURE COUNTS ARE PROVIDED THROUGHOUT THE BUILDING AS FOR NEW CONSTRUCTION.
- THE OCCUPANT LOAD IS BASED ON THE NUMBERS AS CALCULATED FOR EGRESS
- THE OCCUPANT LOAD IS TO BE ASSUMED TO BE ONE HALF MALE AND ONE HALF FEMALE
- UP TO 67% OF MALE WATER CLOSETS MAY BE URINALS
- UNISEX TOILET ROOMS MAY BE USED AS REQUIRED FIXTURES
- TOILET ROOMS MUST BE WITHIN 500 FEET OF THE AREA SERVED
- WHERE DRINKING FOUNTAINS ARE PROVIDED ON A FLOOR, AT LEAST TWO MUST BE PROVIDED

  - HIGH-LOW TYPE FIXTURES ARE PERMITTED TO COUNT AS TWO REQUIRED FIXTURES

  - DRINKING FOUNTAINS MAY BE REPLACED WITH WATER DISPENSERS
- PLUMBING FIXTURE COUNTS ARE SHOWN ON THE CODE DRAWINGS
- ALL FIXTURES ARE ALWAYS AVAILABLE TO ALL PERSONS

FLOOR	OCC	OL	MWC	FWC	MLAV	FLAV	DF
1	A-2	24	0.16	0.18	0.06	0.06	0.048
	A-3	1006	4.0	7.74	2.52	2.52	2.12
	A-2/A-3 EVERYDAY*	830	~~5.53~~	~~6.38~~	~~2.08~~	~~2.08~~	~~1.66~~
	A-2/A-3 HIGH HOLIDAYS*	929	**6.2**	**7.2**	**2.3**	**2.3**	**1.8**
	B	54	1.08	1.08	0.675	0.675	0.54
TOTAL REQUIRED			**11.44**	**16.2**	**5.555**	**5.555**	**4.51**
EXISTING FIXTURES			7	9	6	5	2
ADDITIONAL FIXTURES REQUIRED			**6**	**7**	**0**	**1**	**3**
TOTAL PROVIDED			**13**	**17**	**11**	**10**	**5**
FLOOR	**OCC**	**OL**	**MWC**	**FWC**	**MLAV**	**FLAV**	**DF**
1	E	388	3.88	3.88	3.88	3.88	3.88
	S-2	7	0.04	0.04	0.04	0.04	0.007
2	E	505	5.06	5.06	5.06	5.06	5.05
	S-2	23	0.12	0.12	0.12	0.12	0.023
TOTAL REQUIRED			9.1	9.1	9.1	9.1	8.96
EXISTING FIXTURES			15	15	12	12	10
ADDITIONAL FIXTURES REQUIRED			0	0	0	0	0
TOTAL PROVIDED			15	15	12	12	10
*** TAKE MOST DEMANDING**							

ACCESSIBILITY

- THE WORK WILL COMPLY WITH OBC CHAPTER 11 AND A117.1. REFER TO OHIO AMENDMENTS TO A117.1 WITHIN CHAPTER 11 OF THE OBC.
- AS THE EXISTING BUILDING WAS CONSTRUCTED TO MODERN CODES, GENERAL ACCESSIBILITY ISSUES ARE ASSUMED TO COMPLY. CHANGES TO THE DETAILS OF THE CODES, SUCH AS VERTICAL GRAB BARS IN RESTROOMS, NEED TO BE ADDRESSED, TO THE POINT THAT 20% OF THE PROJECT BUDGET WILL BE EXPENDED ON MAKING THE PATH OF TRAVEL TO THE ALTERED AREAS ACCESSIBLE. THE PATH OF TRAVEL WILL BE MADE FULLY ACCESSIBLE.
- EXTERNAL ELEMENTS, INCLUDING PARKING, LOADING ZONES, ROUTES TO ACCESSIBLE ENTRANCES AND SITE PROGRAM AREAS, WILL BE ACCESSIBLE.
- 60% OF ENTRANCES WILL BE ACCESSIBLE.
- INTERNAL HORIZONTAL AND VERTICAL ROUTES WILL BE ACCESSIBLE.
- ALL COMMON AREAS WILL BE ACCESSIBLE

  - MECHANICAL ROOMS ARE NOT REQUIRED TO BE ACCESSIBLE

  - EMPLOYEE ONLY PRIVATE SPACES WILL BE ABLE TO BE ENTERED AND EXITED
- RESTROOMS WILL BE ACCESSIBLE.

ENERGY CODE REQUIREMENTS:

CLIMATE ZONE: 5A
GLAZING % OF ABOVE GRADE WALL AREA — 40%

BUILDING SYSTEM	REQUIRED	PROVIDED
ROOF:	R-25 (CI)	R-31.3 (CI)
EXTERIOR WALLS:	R-13 + 7.5 (CI)	R-21.2 (CI)
BELOW GRADE WALLS	R-7.5(CI)	R-8 (CI)
UNHEATED SLAB ON GRADE:	NOT REQUIRED	
DOORS:	U-0.45	
WINDOWS	U-0.38, SHGC 0.40	.29, 0.38
CURTAIN WALL GLASS:	U-0.38, SHGC 0.40	.29, 0.38
ENTRANCE DOOR GLASS:	U-0.77, SHGC 0.40	.29, 0.38

SPRAYED FIRE-RESISTANT MATERIALS, AND COATINGS SCHEDULE

ADDITION B PRIMARY STRUCTURAL FRAME	COLUMNS	LATERAL BRACING	DECKING
• ONE HOUR SPRAY FIRE-RESISTANT MATERIAL (SFRM)	ALL COLUMNS AND ROOF STRUCTURE CONNECTED TO COLUMNS	ALL LATERAL BRACING	-
ADDITION B LOW ROOF			
• ONE HOUR SPRAY FIRE-RESISTANT MATERIAL (SFRM)	ALL COLUMNS, EXCEPT	ALL LATERAL BRACING	ALL METAL DECKING
• TWO HOUR SPRAY FIRE-RESISTANT MATERIAL (SFRM)	COLUMNS B-7, C-7, B-9, B-18, B-20, C-20	-	ONE HOUR METAL DECKING

NOTES:
1. REFER TO FLOOR PLANS FOR COLUMN LOCATIONS..
2. FIRE RATING OF ALL METAL DECK ACHIEVED THROUGH USE OF MINIMUM REQUIRED EQUIVALENT THICKNESS OF SPRAY FIREPROOFING.
3. ALL BEAMS TO RECEIVE SFRM. PREP AND PAINT AT FIRST FLOOR LEVEL SPACES WITHOUT CEILINGS.
4. ALL LOW ROOF DECK AND SUPPORTING STRUCTURE TO RECEIVE SFRM (UL P741 OR EQUAL)
5. HIGH ROOF TRUSSES AND METAL DECKING NOT REQUIRED TO BE FIRE-RESISTANT.

Code Consultant
P. R. SHERMAN, P.E.
P.O. BOX 216
ELKINS, NH 03233-0216
603-526-6190

Kitchen Consultant
RICCA DESIGN STUDIOS
515 WASHINGTON STREET
NORWELL, MA 02061
303-621-6327

Landscape Architect
STIMSON
288 NORFOLK STREET
CAMBRIDGE, MA 02139
617 876 8960

Civil Engineer
DONALD G. BOHNING & ASSOCIATES
7979 PUB PARKWAY
VALLEY VIEW, OH 44125
216-642-1130

Mechanical, Electrical, & Plumbing Engineer
KARPINSKI ENGINEERING
3135 EUCLID AVENUE
CLEVELAND, OH 44115
216-391-3700

Structural Engineer
GILSANZ MURRAY STEFICEK, LLP
129 WEST 27TH STREET
NEW YORK, NY 10001
212-254-0030

CENTERBROOK
Architects and Planners, LLP
67 Main Street
Post Office Box 955
Centerbrook, Connecticut 06409-0955
Telephone 860.767.0175
Facsimile 860.767.8719

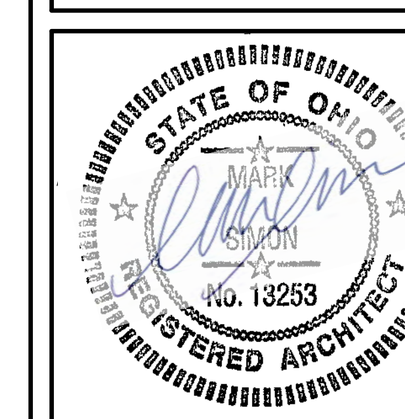

THE PARK SYNAGOGUE 27500 SHAKER BOULEVARD PEPPER PIKE, OHIO 44124

ISSUED:

No Name Date

PHASE:
SITE DEVELOPMENT PLAN APPROVAL

DRAWING NAME:
CODE SUMMARY

JOB #: 1721

© 2021 CENTERBROOK ARCHITECTS AND PLANNERS

DRAWN BY: MGM | DATE: 06/30/2021
CHECKED BY: MS | SCALE: 1/8" = 1'-0"

SHEET:
G1.01

C:\Revit Local Files\1721 Park Synagogue East Building A20 Central_giordano@Centerbrook.com.rvt 6/17/2021 5:45:10 PM

OCCUPANCY SCHEDULE FIRST FLOOR

ROOM NUMBER	ROOM NAME	AREA	GROUP	FACTOR	OCCUPANT LOAD
101	CANTOR	202 SF	B	100	3
102	W/C	39 SF	B	100	1
103	OFFICE	111 SF	B	100	2
104	EXECUTIVE DIRECTOR	239 SF	B	100	3
105	RECEPTION	198 SF	B	100	2
106	OFFICE	124 SF	B	100	2
107	RABBI'S OFFICE	469 SF	B	100	5
108	W/C	43 SF	B	100	1
109	WOMEN'S ROOM	346 SF	A-3	100	4
110	JC	34 SF	A-3	300	1
111	MEN'S ROOM	239 SF	A-3	100	3
112	HALL	158 SF	A-3	0	0
113	COAT CL	153 SF	A-3	300	1
115A	MEMBERSHIP	126 SF	B	100	2
115B	BRIDE'S RM/ CHILDREN'S READING RM	154 SF	A-3	100	2
116	RITUAL DIRECTOR'S OFFICE	199 SF	B	100	2
117	REFERENCE AND PERIODICAL	437 SF	A-3	15	30
119	COLLECTION AREA/ STACKS/ ADULT READING	1148 SF	A-3	100	12
120	RARE BOOKS	129 SF	A-3	100	2
121	DEVELOPMENT DIRECTOR's OFFICE	165 SF	B	100	2
122	JC	22 SF	E	100	1
122	PROGRAMS OFFICE	121 SF	B	100	2
123	CONTROL DESK	317 SF	A-3	100	4
124	WORK ROOM	372 SF	A-3	100	4
125	MAIN LOBBY	4492 SF	A-3	0	0
126	VESTIBULE	203 SF	A-3	0	0
127	SCHOOL DIRECTOR'S OFFICE	182 SF	B	100	2
128	RECEPTION/WAITING	546 SF	B	100	6
129	CONFERENCE	209 SF	B	15	14
130	WORK ROOM	186 SF	B	100	2
131	RABBI ASSISTANT OFFICE	265 SF	B	100	3

OCCUPANCY SCHEDULE FIRST FLOOR

ROOM NUMBER	ROOM NAME	AREA	GROUP	FACTOR	OCCUPANT LOAD
132	SNACK BAR	74 SF	E	20	4
133	GIFT SHOP	165 SF	A-2	100	2
134	STAIR	283 SF	E	0	0
135	CL	53 SF	A-2	300	1
136	MEDIA OFFICE	194 SF	E	100	2
137	VESTIBULE	295 SF	A-3	0	0
138	ACCOUNTING OFFICE	368 SF	E	100	4
139	YOUTH LOUNGE	524 SF	E	15	35
140	CL	42 SF	E	300	1
142	PRESCHOOL CLASSROOM	601 SF	E	20	31
142A	CL	48 SF	E	300	1
142B	W/C	60 SF	E	100	1
143	PRESCHOOL CLASSROOM	570 SF	E	20	29
143A	CL	42 SF	E	300	1
144	PRESCHOOL CLASSROOM	570 SF	E	20	29
144A	CL	42 SF	E	300	1
144B	W/C	92 SF	E	100	1
145	PRESCHOOL CLASSROOM	570 SF	E	20	29
145A	CL	48 SF	E	300	1
146	PRESCHOOL CLASSROOM	568 SF	E	20	29
146A	CL	49 SF	E	300	1
146B	W/C	105 SF	E	100	1
147	LARGE CLASSROOM	911 SF	E	20	46
147A	CL	62 SF	E	300	1
147B	W/C	51 SF	E	100	1
147C	CL	44 SF	E	300	1
148	PRESCHOOL OFFICE	379 SF	E	100	4
148A	CL	48 SF	E	300	1
148B	STORAGE	52 SF	E	300	1
148C	ELECTRICAL ROOM	91 SF	E	300	1
148D	OFFICE	90 SF	E	100	1
149	PRESCHOOL CLASSROOM	570 SF	E	20	29
149A	CL	42 SF	E	300	1
150	PRESCHOOL CLASSROOM	570 SF	E	20	29

OCCUPANCY SCHEDULE FIRST FLOOR

ROOM NUMBER	ROOM NAME	AREA	GROUP	FACTOR	OCCUPANT LOAD
150A	CL	42 SF	E	300	1
150B	W/C	96 SF	E	100	1
151	PRESCHOOL CLASSROOM	570 SF	E	20	29
151A	CL	48 SF	E	300	1
152	PRESCHOOL CLASSROOM	568 SF	E	20	29
152A	CL	49 SF	E	300	1
152B	W/C	105 SF	E	100	2
154	MECH OFFICE	94 SF	S-2	100	1
156	WOMEN'S ROOM	217 SF	E	100	3
157	MEN'S ROOM	219 SF	E	100	3
159	STAIR	324 SF	E	0	0
161	W/C	53 SF	A-2	100	1
162	KITCHEN	1826 SF	A-2	200	10
162A	CATERING STORAGE	317 SF	A-2	300	2
162B	MEAT	76 SF	A-2	300	1
162C	DAIRY	76 SF	A-2	300	1
162D	COOLER	132 SF	A-2	300	1
162E	FREEZER	80 SF	A-2	300	1
162F	JC	28 SF	A-2	300	1
163	MAIN ELECTRICAL	237 SF	S-2	300	1
164	MECHANICAL ROOM	661 SF	S-2	300	3
172	CORRIDOR	2481 SF	E	0	0
174	ELEVATOR	68 SF	E	0	0
174A	ELEV. MACH.	70 SF	S-2	300	1
176	CHAPEL	953 SF	A-3	7	137
177	SANCTUARY	2655 SF	A-3	7	380
177A	BIMAH RAISED PLATFORM	619 SF	A-3	15	42
177B	FIXED SEATING	739 SF	A-3		122
177C	FIXED SEATING	587 SF	A-3		98
177D	FIXED SEATING	594 SF	A-3		98
184	WOMEN'S TOILET ROOM	301 SF	A-3	100	4
185	MEN'S TOILET ROOM	239 SF	A-3	100	3
187	GALLERY	1083 SF	A-3	0	0
188	UNISEX TOILET	57 SF	A-2	100	1
189	UNISEX TOILET	49 SF	A-2	100	1
190	CONCOURSE	226 SF	A-3	0	0
191	COAT CLOSET	80 SF	A-3	300	1
192	PLUMBING ROOM	107 SF	S-2	300	1
193	SERVICE CORRIDOR	320 SF	A-2	0	0
194	STORAGE	638 SF	A-2	300	1
195	PAVILION LOBBY	578 SF	A-3	0	0
196	COMMUNITY HALL	5784 SF	A-2, A-3	7	*929
196A	AV RM	61 SF	A-2, A-3	300	1
196B	CORRIDOR	400 SF	A-2, A-3	0	0
197	VERANDA LOBBY	770 SF	A-3	15	57
198	COAT CL	65 SF	A-3	300	1
199	VESTIBULE	69 SF	A-3	0	0

* OCCUPANCY IS BASED UPON MOST DEMANDING, REFER TO G1.03 2409

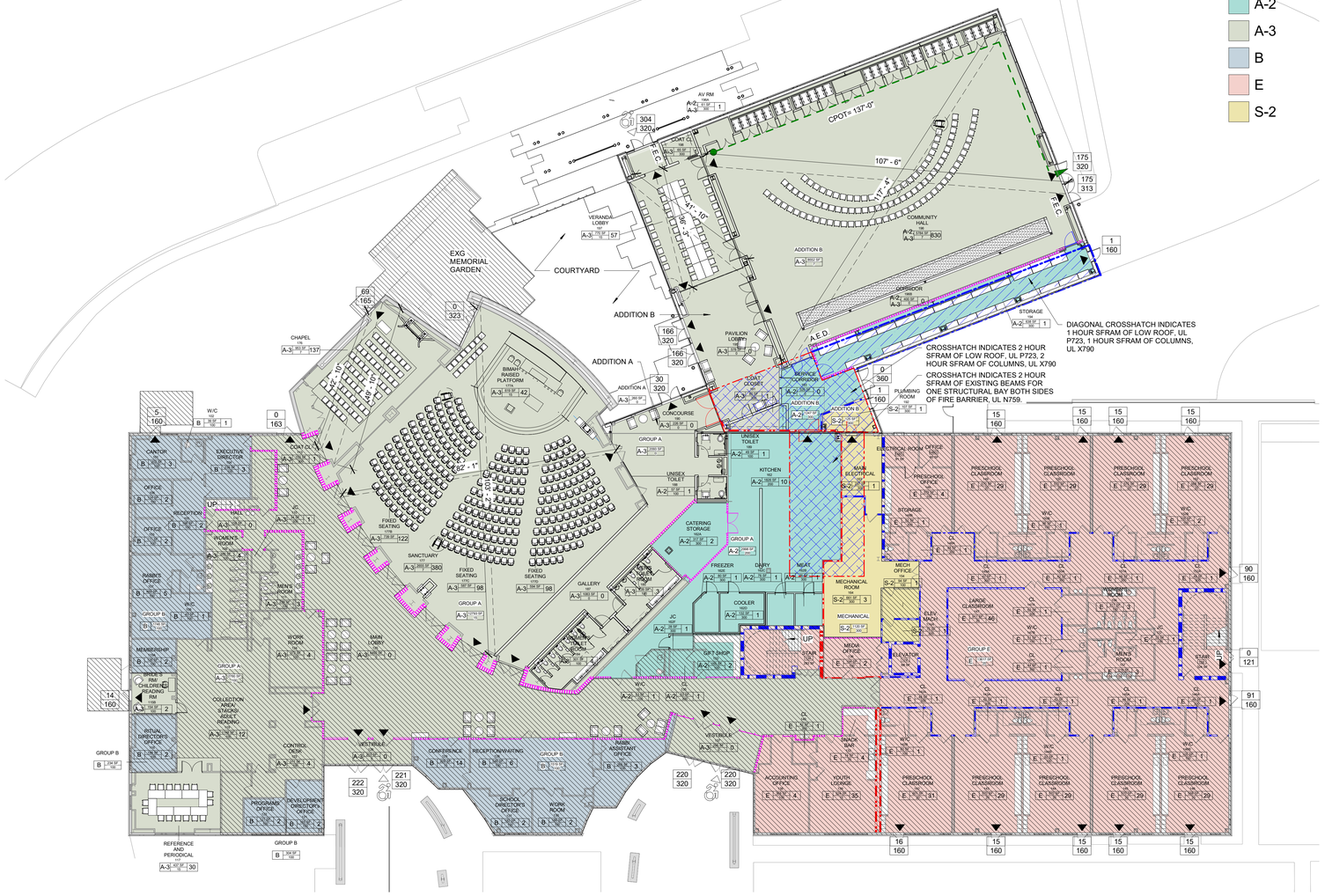

K2 FIRST FLOOR EVERYDAY USE CODE PLAN
1/16" = 1'-0"

0 8 16 32

N

CODE PLAN LEGEND

- 30 MIN FIRE RATED SEPARATION
- ONE HOUR RATED SEPARATION
- TWO HOUR RATED SEPARATION
- SMOKE PARTITION
- SMOKE BARRIER
- ONE HOUR STRUCTURAL FIRE-RESISTANCE
- TWO HOUR STRUCTURAL FIRE-RESISTANCE
- ONE HOUR RATED SHAFT CONSTRUCTION, ALL SIDES INCLUDED, TOP AND BOTTOM WHERE REQUIRED
- EXISTING AREA NOT IN CONTRACT
- TD = X' - X' MAXIMUM TRAVEL DISTANCE
- DEAD END = X' - X' DEAD END TRAVEL DISTANCE
- CPTD = X' - X' COMMON PATH TRAVEL DISTANCE
- MAIN BUILDING ENTRANCE
- EXIT TO GRADE
- BUILDING ENTRANCE
- ACCESSIBLE ROUTE
- EXIT CAPACITY: ACTUAL OCCUPANTS / MAX ALLOWABLE EGRESS CAPACITY
- CLEAR WIDTH OF DOOR (INCHES): ACTUAL EGRESS OCCUPANCY OF DOOR / MAX ALLOWABLE EGRESS OCCUPANCY OF DOOR / WIDTH OF DOOR (INCHES)

ROOM NAME
101
B 150 SF 0
X
ROOM NAME
ROOM NUMBER
ROOM SQUARE FOOTAGE
OCCUPANT LOAD
OCCUPANT LOAD FACTOR
GROUP CLASSIFICATION

404.2.3.1 (a) 18" MIN, 5'-0" MIN — FRONT APPROACH, PULL SIDE
404.2.3.1 (b) 12" MIN*, 4'-0" MIN — FRONT APPROACH, PUSH SIDE
*IF BOTH CLOSER AND LATCH ARE PROVIDED
404.2.3.1 (c) 3'-0" MIN, 5'-0" MIN — HINGE APPROACH, PULL SIDE
404.2.3.1 (d) 3'-6" MIN, 4'-6" MIN — HINGE APPROACH, PULL SIDE
404.2.3.1 (e) 1'-10" MIN, 1'-0" MIN*, 5'-6" MIN — HINGE APPROACH, PUSH SIDE
*IF BOTH CLOSER AND LATCH ARE PROVIDED
**48 MIN IF BOTH CLOSER AND LATCH ARE PROVIDED
2'-0" MIN, 4'-0" MIN — LATCH APPROACH, PULL SIDE
*54 MIN IF CLOSER IS PROVIDED
2'-0" MIN, 3'-6" MIN — LATCH APPROACH, PUSH SIDE
*48 MIN IF CLOSER IS PROVIDED
5'-0" MIN — CIRCULAR TURNING SPACE
5'-0" MIN, 1'-0" MIN, 1'-0" MIN, 5'-0" MIN — T-SHAPED TURNING SPACE
4'-0" MIN, 6'-0" MIN — CLEAR FLOOR SPACE
4'-0" MIN, 2'-6" MIN, 25° MAX — COUNTER, BENCH, OR SINK — CLEAR FLOOR SPACE WITH KNEE CLEARANCE

Code Consultant
P. R. SHERMAN, P.E.
P.O. BOX 216
ELKINS, NH 03233-0216
603-526-6190

Kitchen Consultant
RICCA DESIGN STUDIOS
515 WASHINGTON STREET
NORWELL, MA 02061
303-621-6327

Landscape Architect
STIMSON
288 NORFOLK STREET
CAMBRIDGE, MA 02139
617 876 8960

Civil Engineer
DONALD G. BOHNING & ASSOCIATES
7979 PUB PARKWAY
VALLEY VIEW, OH 44125
216-642-1130

Mechanical, Electrical, & Plumbing Engineer
KARPINSKI ENGINEERING
3135 EUCLID AVENUE
CLEVELAND, OH 44115
216-391-3700

Structural Engineer
GILSANZ MURRAY STEFICEK, LLP
129 WEST 27TH STREET
NEW YORK, NY 10001
212-254-0030

CENTERBROOK
Architects and Planners, LLP
67 Main Street
Post Office Box 955
Centerbrook, Connecticut 06409-0955
Telephone 860.767.0175
Facsimile 860.767.8719

STATE OF OHIO — Vijay Mehta — No. 18333 — REGISTERED ARCHITECT

THE PARK SYNAGOGUE 27500 SHAKER BOULEVARD PEPPER PIKE, OHIO 44124

ISSUED:

No	Name	Date

PHASE:
SITE DEVELOPMENT PLAN APPROVAL

DRAWING NAME:
FIRST FLOOR EVERYDAY USE CODE PLAN

JOB #: 1721

© 2021 CENTERBROOK ARCHITECTS AND PLANNERS

DRAWN BY: KL/MGM
DATE: 06/30/2021
CHECKED BY: MS
SCALE: 1/16" = 1'-0"

SHEET:
G1.02

C:\Revit Local Files\1721 Park Synagogue East Building A20 6/17/2021 5:47:21 PM
Central_gjansen@centerbrook.com.rvt

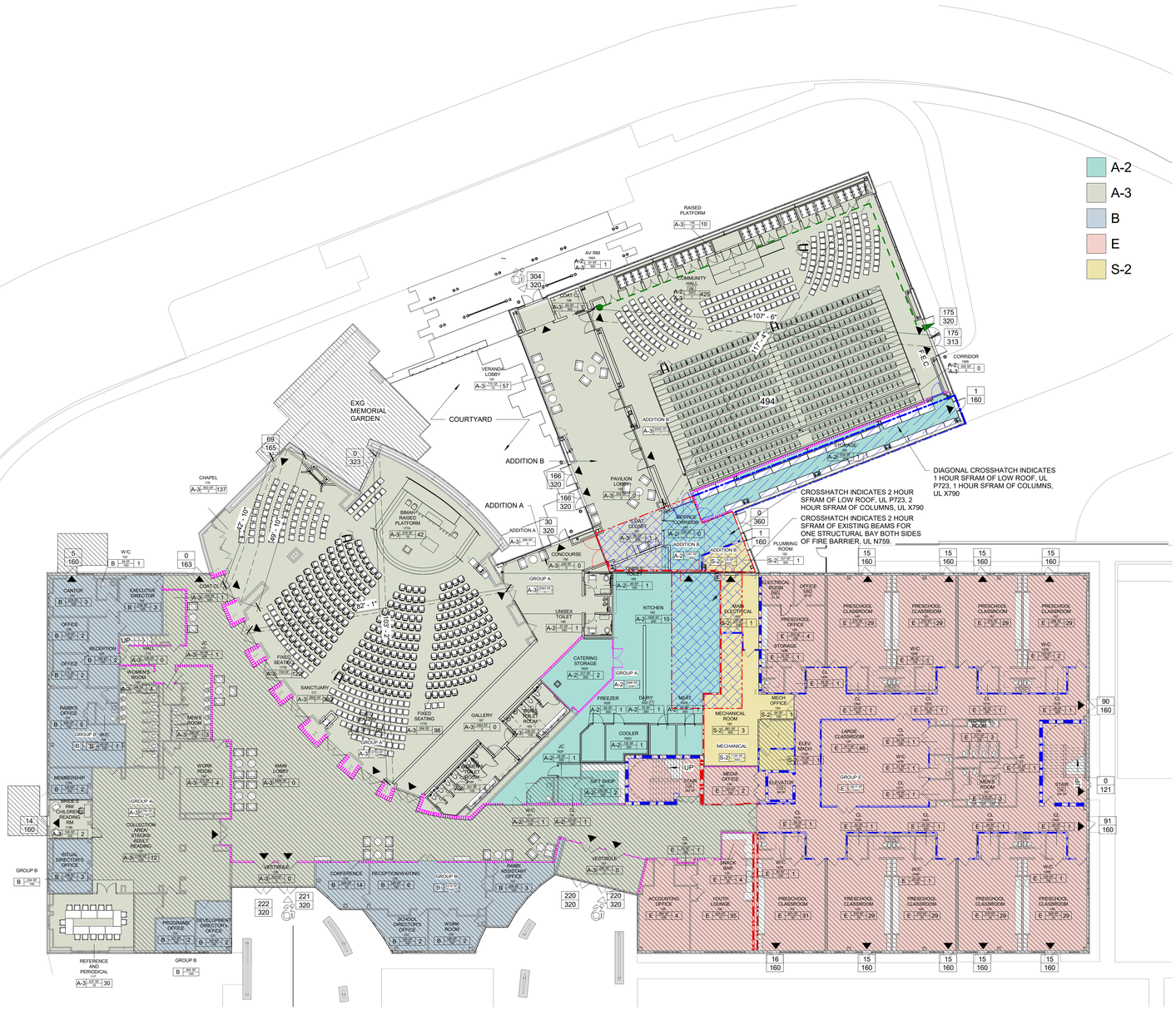

K2 FIRST FLOOR HIGH HOLIDAYS CODE PLAN
1/16" = 1'-0"

CODE PLAN LEGEND

- 30 MIN FIRE RATED SEPARATION
- ONE HOUR RATED SEPARATION
- TWO HOUR RATED SEPARATION
- SMOKE PARTITION
- SMOKE BARRIER
- ONE HOUR STRUCTURAL FIRE-RESISTANCE
- TWO HOUR STRUCTURAL FIRE-RESISTANCE
- ONE HOUR RATED SHAFT CONSTRUCTION, ALL SIDES INCLUDED, TOP AND BOTTOM WHERE REQUIRED
- EXISTING AREA NOT IN CONTRACT
- TD = X' - X" — MAXIMUM TRAVEL DISTANCE
- DEAD END = X' - X" — DEAD END TRAVEL DISTANCE
- CPTD = X' - X" — COMMON PATH TRAVEL DISTANCE
- MAIN BUILDING ENTRANCE
- EXIT TO GRADE
- BUILDING ENTRANCE
- ACCESSIBLE ROUTE
- EXIT CAPACITY: ACTUAL OCCUPANTS / MAX ALLOWABLE EGRESS CAPACITY
- CLEAR WIDTH OF DOOR (INCHES): ACTUAL EGRESS OCCUPANCY OF DOOR / MAX ALLOWABLE EGRESS OCCUPANCY OF DOOR WIDTH OF DOOR (INCHES)

ROOM NAME 101 — B — 150 SF — X — 0
- ROOM NAME
- ROOM NUMBER
- ROOM SQUARE FOOTAGE
- OCCUPANT LOAD
- OCCUPANT LOAD FACTOR
- GROUP CLASSIFICATION

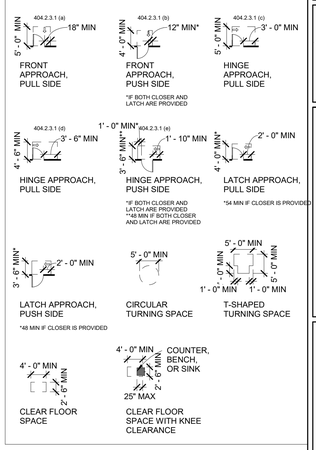

Code Consultant
P. R. SHERMAN, P.E.
P.O. BOX 216
ELKINS, NH 03233-0216
603-526-6190

Kitchen Consultant
RICCA DESIGN STUDIOS
515 WASHINGTON STREET
NORWELL, MA 02061
303-621-6327

Landscape Architect
STIMSON
288 NORFOLK STREET
CAMBRIDGE, MA 02139
617 876 8960

Civil Engineer
DONALD G. BOHNING & ASSOCIATES
7979 PUB PARKWAY
VALLEY VIEW, OH 44125
216-642-1130

Mechanical, Electrical, & Plumbing Engineer
KARPINSKI ENGINEERING
3135 EUCLID AVENUE
CLEVELAND, OH 44115
216-391-3700

Structural Engineer
GILSANZ MURRAY STEFICEK, LLP
129 WEST 27TH STREET
NEW YORK, NY 10001
212-254-0030

CENTERBROOK
Architects and Planners, LLP
67 Main Street
Post Office Box 955
Centerbrook, Connecticut 06409-0955
Telephone 860.767.0175
Facsimile 860.767.8719

STATE OF OHIO — Mark Simon — No. 12533 — REGISTERED ARCHITECT

THE PARK SYNAGOGUE 27500 SHAKER BOULEVARD PEPPER PIKE, OHIO 44124

ISSUED:

No	Name	Date

PHASE: SITE DEVELOPMENT PLAN APPROVAL

DRAWING NAME: FIRST FLOOR HIGH HOLIDAYS USE CODE PLAN

JOB #: 1721

© 2021 CENTERBROOK ARCHITECTS AND PLANNERS

DRAWN BY: KL/MGM	DATE: 06/30/2021
CHECKED BY: MS	SCALE: 1/16" = 1'-0"

SHEET: G1.03

© Richard Lovell Fried 1721 Park Synagogue East Building.ADD 6/17/2021 5:48:45 PM
Owner_gprosen@centerbrook.com.rvt

OCCUPANCY SCHEDULE SECOND FLOOR

ROOM NUMBER	ROOM NAME	AREA	GROUP	FACTOR	OCCUPANT LOAD
200	MECHANICAL ROOM	753 SF	S-2	300	3
201	MECHANICAL	1423 SF	S-2	300	5
202	MECHANICAL ROOM	2064 SF	S-2	300	7
212	STAIR	310 SF	E	0	0
216	ART ROOM STORAGE	121 SF	E	300	1
217	JC	57 SF	E	300	1
219	WOMEN WC	285 SF	E	100	3
220	MEN WC	279 SF	E	100	3
220A	JC	32 SF	E	300	1
221	STAIR	324 SF	E	0	0
222	ELEVATOR	67 SF	E	0	0
223A	SATELLITE KITCHEN	112 SF	E	200	1
224A	BUILDING STORAGE	1011 SF	S-2	300	4
225	TELE/DATA	143 SF	S-2	300	1
226	COMMON ROOM/LOUNGE	435 SF	E	15	29
229	ELEC. CLOSET	144 SF	S-2	300	1
230B	STORAGE	80 SF	E	300	1
237	CORRIDOR	2399 SF	E	0	0
238	ELEC	76 SF	S-2	300	1
239	TELE/ DATA	57 SF	S-2	300	1
240	CLASSROOM	433 SF	E	20	22
240A	CL	76 SF	E	300	1
241	CLASSROOM	347 SF	E	20	18
241A	CL	53 SF	E	300	1
242	CLASSROOM	358 SF	E	20	18
242A	CL	59 SF	E	300	1
243	CLASSROOM	365 SF	E	20	19
243A	CL	62 SF	E	300	1
244	CLASSROOM	365 SF	E	20	19
244A	CL	62 SF	E	300	1
245	CLASSROOM	364 SF	E	20	19
245A	CL	63 SF	E	300	1
246	CLASSROOM	363 SF	E	20	19
246A	CL	64 SF	E	300	1
247	CLASSROOM	515 SF	E	20	26
248	CLASSROOM	314 SF	E	20	16
249	STORAGE	342 SF	E	300	1
250	MULTI-PURPOSE ROOM	516 SF	E	7	74

OCCUPANCY SCHEDULE SECOND FLOOR

ROOM NUMBER	ROOM NAME	AREA	GROUP	FACTOR	OCCUPANT LOAD
251	ART ROOM	787 SF	E	50	16
254	BOARDROOM	1002 SF	E	20	50
255	CLASSROOM	357 SF	E	20	18
255A	CL	59 SF	E	300	1
256	CLASSROOM	366 SF	E	20	19
256A	CL	63 SF	E	300	1
257	CLASSROOM	365 SF	E	20	19
257A	CL	63 SF	E	300	1
258	CLASSROOM	365 SF	E	20	19
258A	CL	63 SF	E	300	1
259	CLASSROOM	362 SF	E	20	19
259A	CL	60 SF	E	300	1
260	CLASSROOM	515 SF	E	20	26
261	CLASSROOM	314 SF	E	20	16
					528

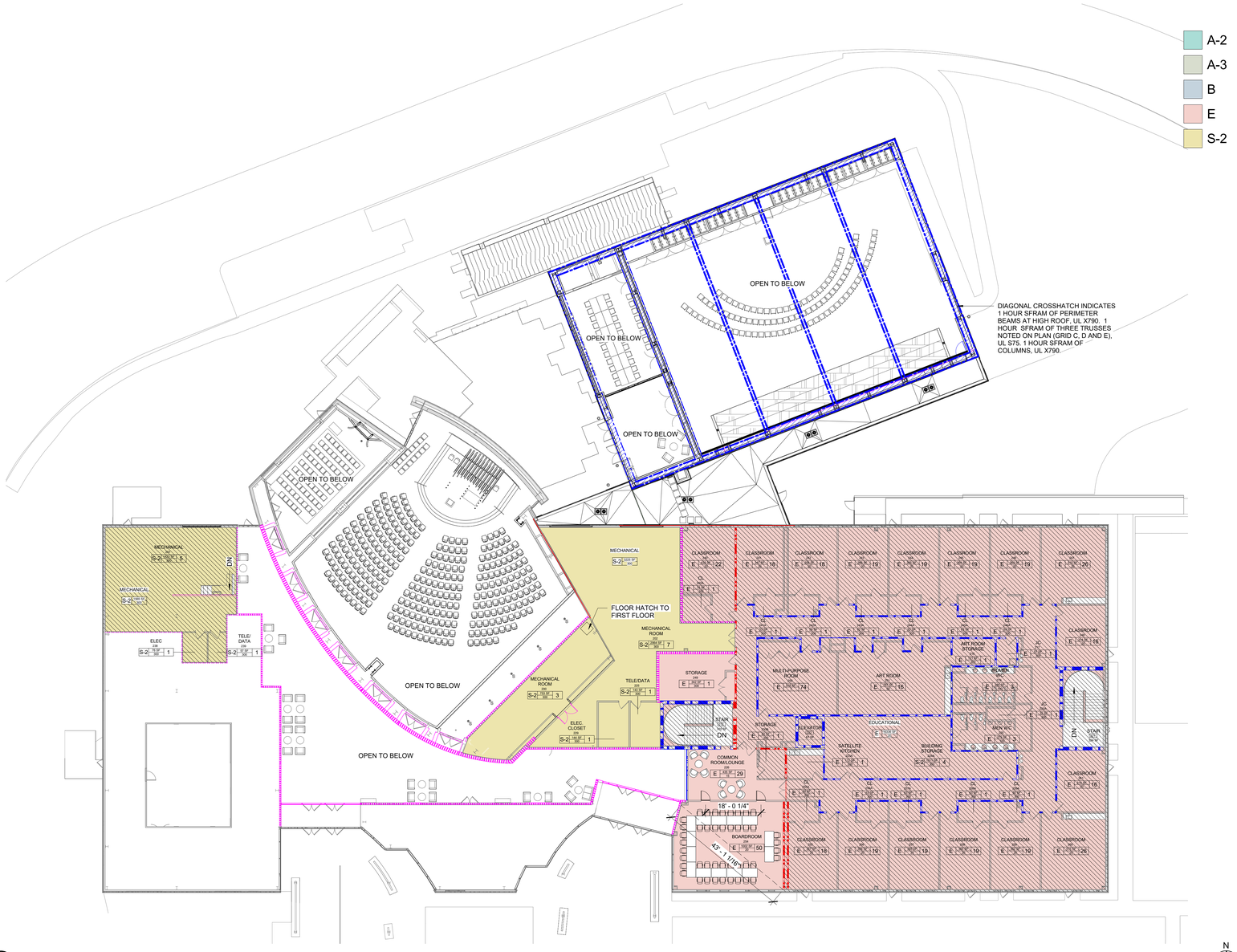

K1 SECOND FLOOR CODE PLAN
1/16" = 1'-0"

0 8 16 32 N

CODE PLAN LEGEND

- 30 MIN FIRE RATED SEPARATION
- ONE HOUR RATED SEPARATION
- TWO HOUR RATED SEPARATION
- SMOKE PARTITION
- SMOKE BARRIER
- ONE HOUR STRUCTURAL FIRE-RESISTANCE
- TWO HOUR STRUCTURAL FIRE-RESISTANCE
- ONE HOUR RATED SHAFT CONSTRUCTION, ALL SIDES INCLUDED, TOP AND BOTTOM WHERE REQUIRED
- EXISTING AREA NOT IN CONTRACT
- TD = X' - X" — MAXIMUM TRAVEL DISTANCE
- DEAD END = X' - X" — DEAD END TRAVEL DISTANCE
- CPTD = X' - X" — COMMON PATH TRAVEL DISTANCE
- MAIN BUILDING ENTRANCE
- EXIT TO GRADE
- BUILDING ENTRANCE
- ACCESSIBLE ROUTE
- EXIT CAPACITY: ACTUAL OCCUPANTS / MAX ALLOWABLE EGRESS CAPACITY
- CLEAR WIDTH OF DOOR (INCHES): ACTUAL EGRESS OCCUPANCY OF DOOR / MAX ALLOWABLE EGRESS OCCUPANCY OF DOOR / WIDTH OF DOOR (INCHES)

ROOM NAME
101
B 150 SF 0
ROOM NAME
ROOM NUMBER
ROOM SQUARE FOOTAGE
OCCUPANT LOAD
OCCUPANT LOAD FACTOR
GROUP CLASSIFICATION

404.2.3.1 (a) 5'-0" MIN 18" MIN — FRONT APPROACH, PULL SIDE
404.2.3.1 (b) 4'-0" MIN 12" MIN* — FRONT APPROACH, PUSH SIDE *IF BOTH CLOSER AND LATCH ARE PROVIDED
404.2.3.1 (c) 5'-0" MIN 3'-0" MIN — HINGE APPROACH, PULL SIDE
404.2.3.1 (d) 4'-6" MIN 3'-6" MIN — HINGE APPROACH, PULL SIDE
404.2.3.1 (e) 1'-0" MIN* 5'-6" MIN* 1'-10" MIN — HINGE APPROACH, PUSH SIDE *IF BOTH CLOSER AND LATCH ARE PROVIDED *48 MIN IF BOTH CLOSER AND LATCH ARE PROVIDED
2'-0" MIN 4'-0" MIN* — LATCH APPROACH, PULL SIDE *54 MIN IF CLOSER IS PROVIDED
3'-6" MIN* 2'-0" MIN — LATCH APPROACH, PUSH SIDE *48 MIN IF CLOSER IS PROVIDED
5'-0" MIN — CIRCULAR TURNING SPACE
5'-0" MIN 1'-0" MIN 1'-0" MIN 5'-0" MIN — T-SHAPED TURNING SPACE
4'-0" MIN 2'-6" MIN 2% — CLEAR FLOOR SPACE
4'-0" MIN 2'-6" MIN 25" MAX COUNTER, BENCH, OR SINK — CLEAR FLOOR SPACE WITH KNEE CLEARANCE

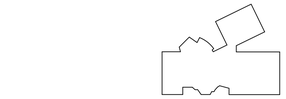
N KEY PLAN

Code Consultant
P. R. SHERMAN, P.E.
P.O. BOX 216
ELKINS, NH 03233-0216
603-526-6190

Kitchen Consultant
RICCA DESIGN STUDIOS
515 WASHINGTON STREET
NORWELL, MA 02061
303-621-6327

Landscape Architect
STIMSON
288 NORFOLK STREET
CAMBRIDGE, MA 02139
617 876 8960

Civil Engineer
DONALD G. BOHNING & ASSOCIATES
7979 PUB PARKWAY
VALLEY VIEW, OH 44125
216-642-1130

Mechanical, Electrical, & Plumbing Engineer
KARPINSKI ENGINEERING
3135 EUCLID AVENUE
CLEVELAND, OH 44115
216-391-3700

Structural Engineer
GILSANZ MURRAY STEFICEK, LLP
129 WEST 27TH STREET
NEW YORK, NY 10001
212-254-0030

CENTERBROOK
Architects and Planners, LLP
67 Main Street
Post Office Box 955
Centerbrook, Connecticut 06409-0955
Telephone 860.767.0175
Facsimile 860.767.8719

STATE OF OHIO — Mark Gdula — No. 12533 — REGISTERED ARCHITECT

THE PARK SYNAGOGUE
27500 SHAKER BOULEVARD
PEPPER PIKE, OHIO 44124

ISSUED:

No	Name	Date

PHASE:
SITE DEVELOPMENT PLAN APPROVAL

DRAWING NAME:
SECOND FLOOR CODE PLAN

JOB #: 1721

© 2021 CENTERBROOK ARCHITECTS AND PLANNERS

DRAWN BY: KL/MGM | DATE: 06/30/2021
CHECKED BY: MS | SCALE: 1/16" = 1'-0"

SHEET:
G1.04

C:\Revit Local Files\1721 Park Synagogue East Building A20 6/17/2021 5:51:39 PM
Central_gjordan@centerbrook.com.rvt

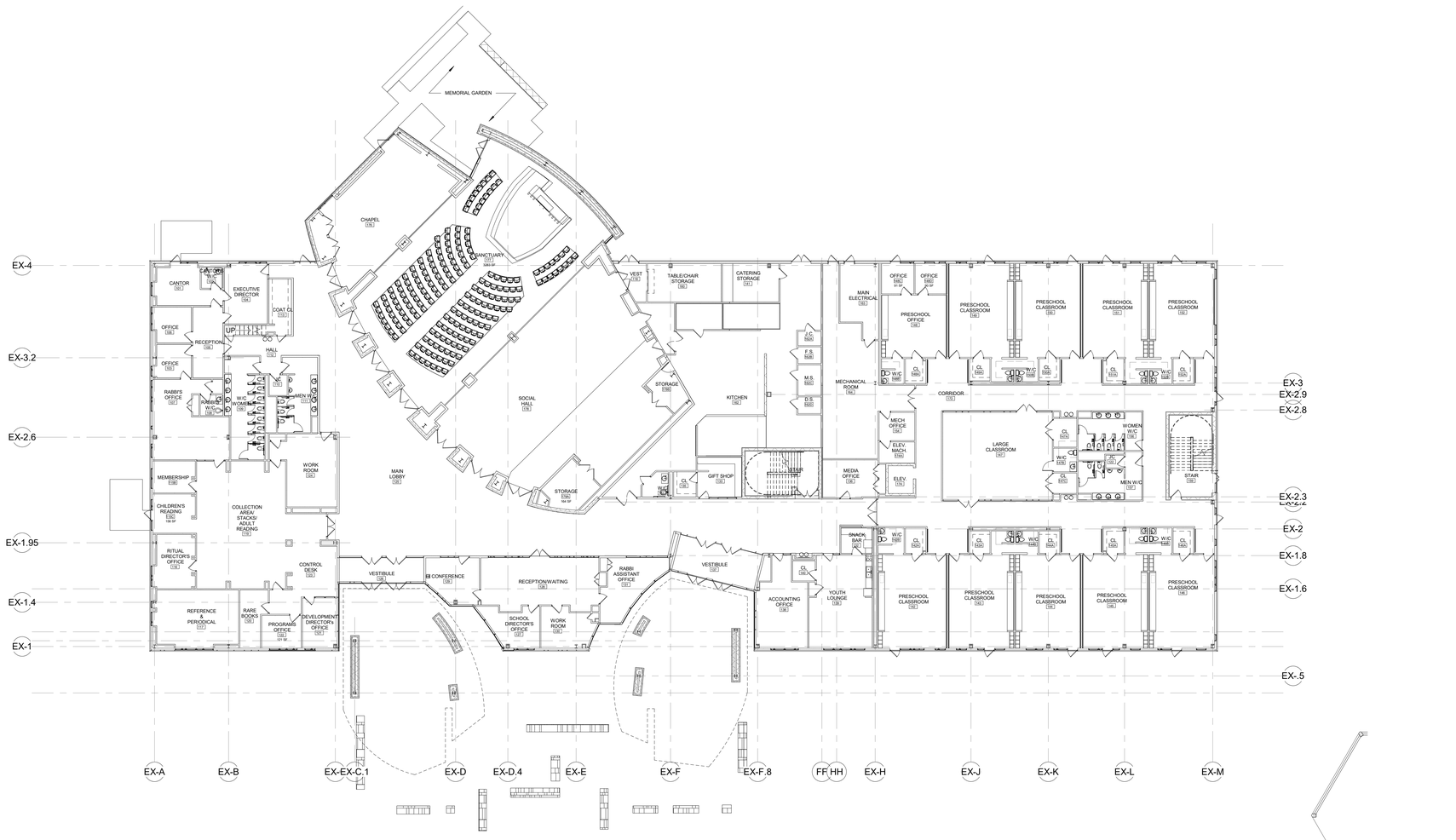

K2 EXISTING FIRST FLOOR PLAN
1/16" = 1'-0"

0 8 16 32

N

C:\Revit Local Files\1721 Park Synagogue East Building A20 6/17/2021 5:51:53 PM
Central_gjansen@centerbrook.com.rvt

Code Consultant

P. R. SHERMAN, P.E.

P.O. BOX 216
ELKINS, NH 03233-0216
603-526-6190

Kitchen Consultant

RICCA DESIGN STUDIOS

515 WASHINGTON STREET
NORWELL, MA 02061
303-621-6327

Landscape Architect

STIMSON

288 NORFOLK STREET
CAMBRIDGE, MA 02139
617 876 8960

Civil Engineer

DONALD G. BOHNING & ASSOCIATES

7979 PUB PARKWAY
VALLEY VIEW, OH 44125
216-642-1130

Mechanical, Electrical, & Plumbing Engineer

KARPINSKI ENGINEERING

3135 EUCLID AVENUE
CLEVELAND, OH 44115
216-391-3700

Structural Engineer

GILSANZ MURRAY STEFICEK, LLP

129 WEST 27TH STREET
NEW YORK, NY 10001
212-254-0030

CENTERBROOK

Architects and Planners, LLP

67 Main Street
Post Office Box 955
Centerbrook, Connecticut 06409-0955

Telephone 860.767.0175
Facsimile 860.767.8719

STATE OF OHIO
No. 12533
REGISTERED ARCHITECT

THE PARK SYNAGOGUE
27500 SHAKER BOULEVARD
PEPPER PIKE, OHIO 44124

ISSUED:

No	Name	Date

PHASE:
SITE DEVELOPMENT PLAN APPROVAL

DRAWING NAME:
EXISTING FIRST FLOOR PLAN

JOB #: 1721

© 2021 CENTERBROOK ARCHITECTS AND PLANNERS

DRAWN BY: KL/MGM
DATE: 06/30/2021
CHECKED BY: MS
SCALE: 1/16" = 1'-0"

SHEET:
G3.01

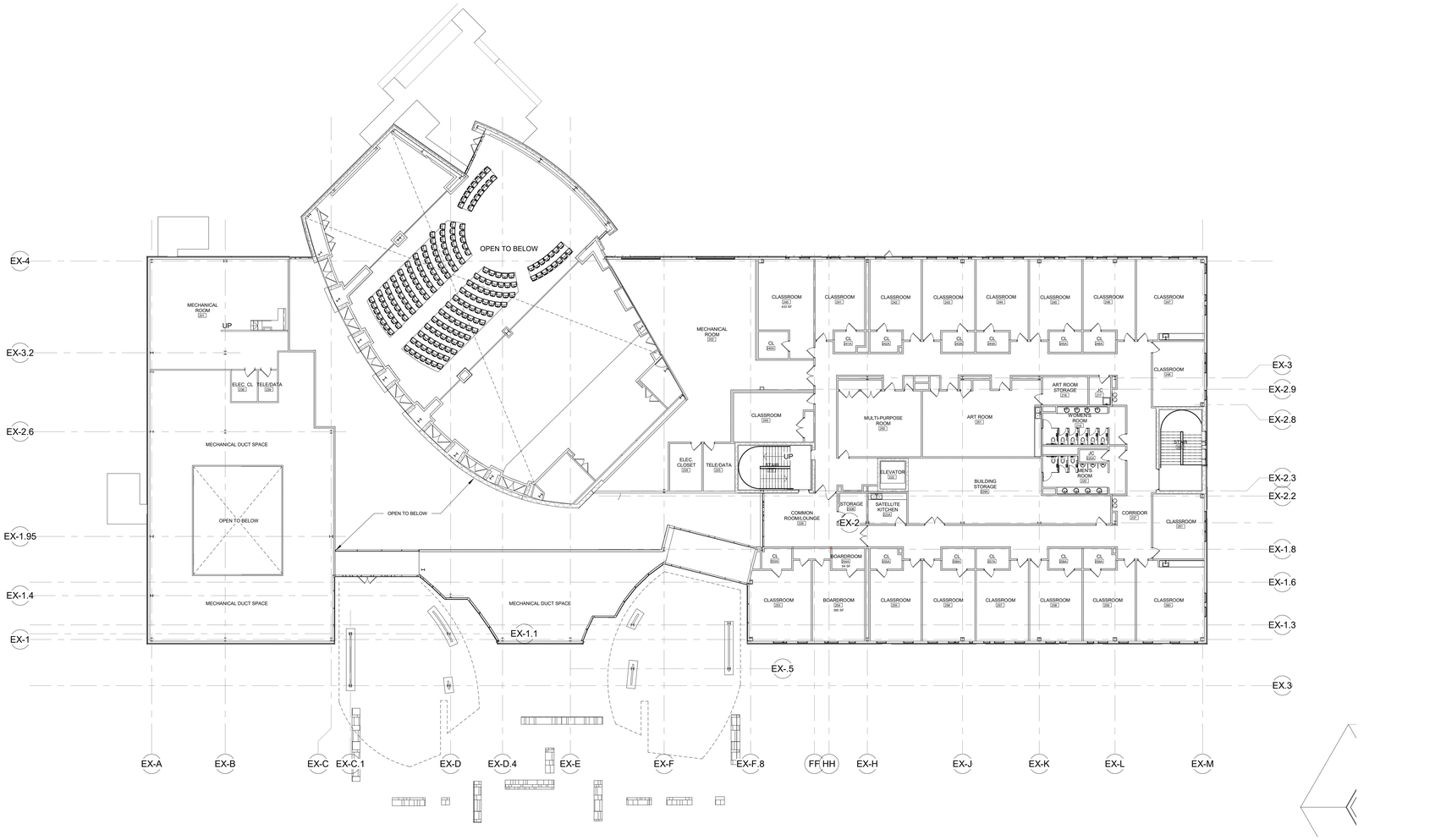

K2 EXISTING SECOND FLOOR PLAN
1/16" = 1'-0"

C:\Revit Local Files\1721 Park Synagogue East Building A20 6/17/2021 5:52:08 PM
Cowny_gonowdg@stimson.com.rvt

Code Consultant

P. R. SHERMAN, P.E.

P.O. BOX 216
ELKINS, NH 03233-0216
603-526-6190

Kitchen Consultant

RICCA DESIGN STUDIOS

515 WASHINGTON STREET
NORWELL, MA 02061
303-621-6327

Landscape Architect

STIMSON

288 NORFOLK STREET
CAMBRIDGE, MA 02139
617 876 8960

Civil Engineer

DONALD G. BOHNING & ASSOCIATES

7979 PUB PARKWAY
VALLEY VIEW, OH 44125
216-642-1130

Mechanical, Electrical, & Plumbing Engineer

KARPINSKI ENGINEERING

3135 EUCLID AVENUE
CLEVELAND, OH 44115
216-391-3700

Structural Engineer

GILSANZ MURRAY STEFICEK, LLP

129 WEST 27TH STREET
NEW YORK, NY 10001
212-254-0030

CENTERBROOK

Architects and Planners, LLP

67 Main Street
Post Office Box 955
Centerbrook, Connecticut 06409-0955

Telephone 860.767.0175
Facsimile 860.767.8719

STATE OF OHIO
No. 12533
REGISTERED ARCHITECT

THE PARK SYNAGOGUE 27500 SHAKER BOULEVARD PEPPER PIKE, OHIO 44124

ISSUED:

No	Name	Date

PHASE:
SITE DEVELOPMENT PLAN APPROVAL

DRAWING NAME:
EXISTING SECOND FLOOR PLAN

JOB #: 1721

© 2021 CENTERBROOK ARCHITECTS AND PLANNERS

DRAWN BY: KL/MGM
DATE: 06/30/2021
CHECKED BY: MS
SCALE: 1/16" = 1'-0"

SHEET:
G3.02

PROPOSED SITE LOGISTICS

SHAKER BOULEVARD

One Way Traffic Only

One Way Traffic Only

One Way Traffic Only

Construction Entrance/Exit

Dumpster lay down area

Temporary Lay Down Entrance

Materials lay down

Gate

Gate

Gate

In Case of an Emergency meeting point

Wheel Wash station

Minimal parking Office/Visitors only

Topsoil lay down area

2 Office Restrooms

Temporary dumpster location for demo only

3 Field Restrooms

Job Trailer

Job Trailer

Option #1

Option #2

Pool in use?

Playground

School Entrance only (no construction entrance)

Construction Parking 55 spaces

Optional long term lay down area

PROPOSED ADDITION

EXISTING PARK SYNAGOGUE EAST BUILDING

L1.01 COURTYARD & LOADING DOCK ENLARGEMENT PLAN

L7.02 SOUTH ENTRY COURT REPAIR PLAN

EXISTING DRIVEWAY APRON TO REMAIN

EXISTING CONCRETE SIDEWALK TO REMAIN PROVIDE 10' WIDE ACCESS GATE AND 3' WIDE MAN GATE

EXISTING CHILLER TO REMAIN. SEE MEP DRAWINGS

EXISTING CONCRETE SIDEWALK AND CURB TO REMAIN

EXISTING TERRACES TO REMAIN

SEE CIVIL DRAWINGS FOR ROADWAY LAYOUT AND ALIGNMENT

SEE CIVIL DRAWINGS FOR DRAINAGE INFORMATION

SEE CIVIL DRAWINGS FOR PARKING LOT LAYOUT

PROPERTY LINE (TYP.)

L.O.W. (TYP.)

75' SETBACK

50' SETBACK

BRAINARD ROAD

9 SPACES (6 ACCESSIBLE)

11 SPACES

17 SPACES

5 SPACES

6 SPACES

9 SPACES

LAYOUT LEGEND

- POB X — POINT OF BEGINNING
- ALIGNMENT
- LINEAR DIMENSION
- ANGULAR DIMENSION
- RADIUS DIMENSION
- CENTER LINE

LAYOUT NOTES

1. Locate, protect, and maintain bench marks, monuments, control points, and project engineering reference points. Re-establish disturbed or destroyed items at Contractor's expense.
2. Examine the areas and conditions under which site work is performed. Report any discrepancies with the plan to the Landscape Architect. Do not proceed with the work until unsatisfactory conditions are corrected.
3. Report discrepancies in drawings or specifications to the Landscape Architect for clarifications and adjustments before commencing work. Any deviations or changes from these drawings without written acceptance of the Landscape Architect shall absolve the Landscape Architect of any and all responsibility of said deviation and change.
4. Written dimensions take precedence over scaled dimensions.
5. Dimensions indicated on plans are for horizontal control and are accurate if measured on a level line. Measure horizontal control dimensions on a level line, not parallel with ground slope.
6. All dimensions taken from vertical surfaces, i.e. curbs & walls, are understood to be measured from the face of the vertical element unless otherwise specified.
7. All angles assumed to be 90° unless otherwise specified.

SYM	DESCRIPTION	
P1	PAVEMENT TYPE 1: BITUMINOUS CONCRETE PAVEMENT - SEE CIVIL ENGINEER'S DRAWINGS	
P2	PAVEMENT TYPE 2: CEMENT CONCRETE PAVEMENT (PEDESTRIAN)	1 L4.00
P3	PAVEMENT TYPE 3: CEMENT CONCRETE PAVEMENT (VEHICULAR)	1 L4.00
P4	PAVEMENT TYPE 4: PORCELAIN PAVERS ON CONCRETE BASE SEE SPECIFICATIONS	3 L4.00
P5	PAVEMENT TYPE 5: PORCELAIN PAVERS ON DENSE GRADE SEE SPECIFICATIONS	5 L4.00
P6	PAVEMENT TYPE 6: RESIN BONDED AGGREGATE PAVING SEE SPECIFICATIONS	6 L4.00
DW	DETECTABLE WARNING PANEL SEE SPECIFICATIONS	7 L4.00
SD	SLOT DRAIN - SEE CIVIL DRAWINGS FOR GRADING AND DRAINAGE INFORMATION	8 L4.00
C1	CURB TYPE 1: CONCRETE CURB - SEE CIVIL ENGINEER'S DRAWINGS	
W1	WALL TYPE 1: FREESTANDING SCREEN WALL	9 L4.00 / 11 L4.00
W2	WALL TYPE 2: PERFORATED BRONZE SCRIM - SEE ARCHITECTURAL DRAWINGS	
W3	WALL TYPE 3: ENTRANCE SIGN	10 L4.00
F1	FURNISHING TYPE 1: DECORATIVE SECURITY BOLLARD (15 TOTAL) SEE SPECIFICATIONS. SEE SITE LIGHTING PLAN FOR ILLUMINATED BOLLARD LOCATIONS.	13 L4.00
F2	FURNISHING TYPE 2: LANDSCAPE FORMS PALISADE BENCH (9 TOTAL 96" LENGTH) (2 TOTAL 60" LENGTH) SEE SPECIFICATIONS	14 L4.00
F3	FURNISHING TYPE 3: WASTE RECEPTACLE (4 TOTAL) SEE SPECIFICATIONS	12 L4.00
R1	RAILING TYPE 2: AMETCO TRELLIS PRIVACY FENCE - SEE SPECIFICATIONS	15 L4.00
R2	RAILING TYPE 3: AMETCO TRELLIS UTILITY ENCLOSURE - SEE SPECIFICATIONS	15 L4.00

0 15 30 75 ft

Code Consultant
PHILIP R. SHERMAN, P.E.
P.O. BOX 216
ELKINS, NH 03233-0216
603-526-6190

Kitchen Consultant
RICCA DESIGN STUDIOS
515 WASHINGTON STREET
NORWELL, MA 02061
303-621-6327

Landscape Architect
STEPHEN STIMSON ASSOCIATES
288 NORFOLK STREET
CAMBRIDGE, MA 02138
617-876-8960

Civil Engineer
DONALD G. BOHNING & ASSOCIATES
7979 PUB PARKWAY
VALLEY VIEW, OH 44125
216-642-1130

Mechanical, Electrical, & Plumbing Engineer
KARPINSKI ASSOCIATES, INC.
3135 EUCLID AVENUE
CLEVELAND, OH 44115
216-391-3700

Structural Engineer
GILSANZ MURRAY STEFICEK, LLP
129 WEST 27TH STREET
NEW YORK, NY 10001
212-254-0030

CENTERBROOK
Architects and Planners, LLP
67 Main Street
Post Office Box 955
Centerbrook, Connecticut 06409-0955
Telephone 860.767.0175
Facsimile 860.767.8719

THE PARK SYNAGOGUE
27500 SHAKER BOULEVARD
PEPPER PIKE, OHIO 44124

ISSUED:

No Name Date

PHASE:
SITE DEVELOPMENT PLAN APPROVAL

DRAWING NAME:
OVERALL SITE PLAN

JOB #: 1721

© 2021 CENTERBROOK ARCHITECTS AND PLANNERS

DRAWN BY: SC/RI | DATE: 06/18/2021
CHECKED BY: JW | SCALE:1" = 30'-0"

SHEET:
PH.01

8/27/2021 8:58:48 AM

PHASE 1A - UTILITY RELOCATIONS 7/9/21 THROUGH 9/27/21

SHAKER BOULEVARD 60'

BRAINARD ROAD 86'

RELOCATED BRAINARD RD.

INTERSTATE 271

TEMPORARY ACCESS ROAD

84,013.42 sf

PHASE 1 WORK LIMITS

SUBPHASE 1 - INSTALL NEW SANITARY SEWER CONNECTION

GRASS PLAY FIELD AREA

PARK EAST SYNAGOGUE BUILDING

PLAYGROUND

POOL

PAVILION

GAZEBO

ASPHALT DRIVE

GRASS

STORM WATER RETENTION BASIN

GRASS BIO-RETENTION AREA

ASPHALT PARKING SURFACE

AGGREGATE DRIVE

98 L.F.

115 L.F.

91 L.F.

69 L.F.

DEMOLITION NOTES (X)

NO.	DESCRIPTION	NO.	DESCRIPTION
1	EXISTING CURB & UNDERDRAIN TO BE REMOVED	11	RE-USE EXISTING 12" STORM SEWER, RECONSTRUCT BASIN & M.H.
2	APPROXIMATE LIMITS OF PAVEMENT REMOVAL WITH FULL DEPTH SAW CUT	12	SANITARY GREASE TRAP TO BE REMOVED (NEW TO BE CONSTRUCTED)
3	2' SEGMENT OF CURB TO BE REMOVED	13	FIRE LINE AND DOMESTIC WATER SERVICE TO BE REMOVED
4	EXISTING CURB, UNDERDRAIN & PAVEMENT TO BE REMOVED (FULL DEPTH SAW CUT IF REQ'D)	14	FIRE HYDRANT TO BE REMOVED FOR USE IN RELOCATION, PER PLAN
5	EXISTING ADA CURB RAMP TO BE REMOVED	15	ELECTRIC TRANSFORMER TO BE REMOVED
6	HORIZONTAL CURB CUT	16	EXISTING CONCRETE WALKWAY TO BE REMOVED (LIMIT TO BE FIELD DETERMINED)
7	CURB RECONSTRUCTION INCLUDING UNDERDRAIN (MATCH EXISTING CURB PROFILE)	17	EXISTING ELECTRIC/TELEPHONE/CABLE TO BE REMOVED
8	EXISTING ASPHALT PAVEMENT TO BE REMOVED	18	EXISTING TRUCK DOCK, RAMP, ETC. TO BE REMOVED
9	EXISTING SIGN AND ELECTRICAL SERVICE TO BE REMOVED (SEE LANDSCAPE PLAN)	19	EXISTING SIDEWALK TO BE REMOVED (LIMIT TO BE FIELD DETERMINED)
10	GAS LINE AND METER TO BE REMOVED (NEW SERVICE TO BE CONSTRUCTED)	20	EXISTING TREE REMOVAL (TYP.) X

TREE REMOVAL PLAN

N.T.S.

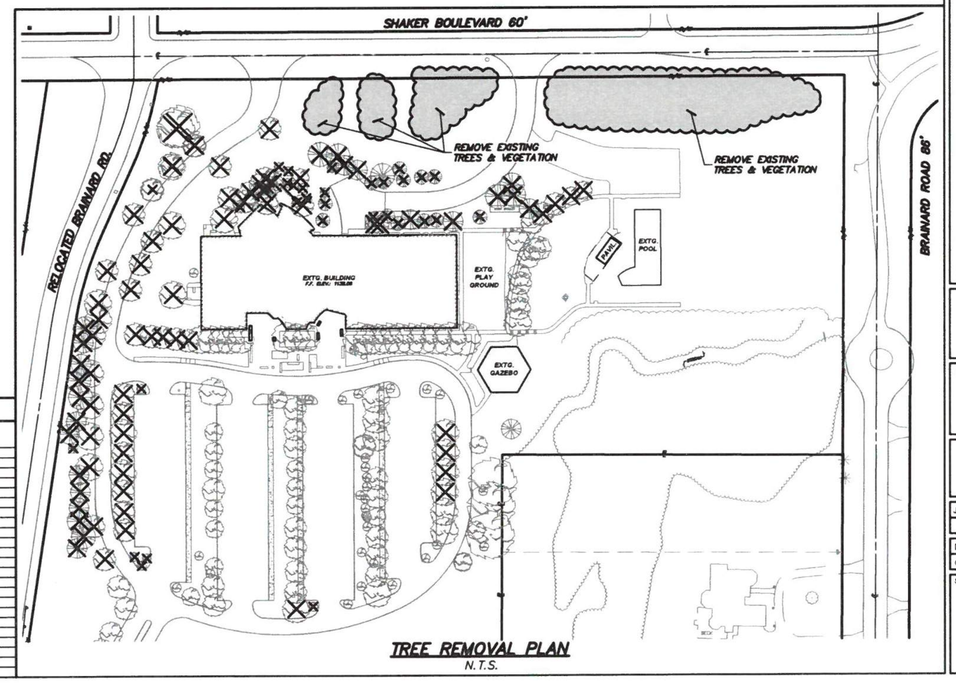

GRAPHIC SCALE 0' 20' 40'

Code Consultant
PHILIP R. SHERMAN, P.E.
P.O. BOX 216
ELKINS, NH 03233-0216
603-526-6190

Kitchen Consultant
RICCA DESIGN STUDIOS
515 WASHINGTON STREET
NORWELL, MA 02061
303-621-6327

Landscape Architect
STEPHEN STIMSON ASSOCIATES
15 DEPOT AVENUE
FALMOUTH, MA 02540
508-548-8119

Civil Engineer
DONALD G. BOHNING & ASSOCIATES
7979 PUB PARKWAY
VALLEY VIEW, OH 44125
216-642-1130

Mechanical, Electrical, & Plumbing Engineer
KARPINSKI ENGINEERING
3135 EUCLID AVENUE
CLEVELAND, OH 44115
216-391-3700

Structural Engineer
GILSANZ MURRAY STEFICEK, LLP
129 WEST 27TH STREET
NEW YORK, NY 10001
212-254-0030

CENTERBROOK
Architects and Planners, LLP
67 Main Street
Post Office Box 955
Centerbrook, Connecticut 06409-0955
Telephone 860.767.0175
Facsimile 860.767.8719

THE PARK SYNAGOGUE
27500 SHAKER BOULEVARD
PEPPER PIKE, OHIO 44124

ISSUED:

No	Name	Date

SITE DEVELOPMENT PLAN APPROVAL

DRAWING NAME: SITE PHASE 1A

JOB #: 1721 (DGB#3406-8)

© 2020 CENTERBROOK ARCHITECTS AND PLANNERS

DRAWN BY: T.M. | DATE: 06/18/2021
CHECKED BY: EK | SCALE: AS NOTED

SHEET: PH.1A

PHASE 2A - SOCIAL HALL AND KITCHEN RENOVATION 7/15/21 THROUGH 3/15/22

DEMOLITION KEYNOTES

No.	Description
D01	REMOVE EXISTING WALLS SHOWN WITH DASHED LINES IN THEIR ENTIRETY, INCLUDING DOORS, FRAMES, AND RELATED ITEMS. LEAVE CONDITION FLUSH AT WALLS, CEILING, AND FLOOR SURFACES.
D18	REMOVE EXISTING CARPET FLOOR FINISH INCLUDING ADHESIVES AND WALL BASE (VINYL OR WOOD). REFER TO THE ARCHITECTURAL SPECIFICATIONS AND NEW FLOOR FINISH MANUFACTURER'S INSTRUCTIONS AND RECOMMENDATIONS REGARDING PREPARATION OF THE EXISTING CONCRETE FLOOR SLAB FOR NEW FLOORING INSTALLATIONS.
D22	REMOVE EXISTING STEEL COLUMN. REFER TO STRUCTURAL DRAWINGS FOR TEMPORARY SUPPORT AND NEW STRUCTURE.
D24	REMOVE AND SALVAGE EXISTING WOOD WALL PANELS AT LOCATIONS BEING DISTURBED. PREPARE WOOD PANELS FOR RE-INSTALLATION IN UNIFORM LAYOUT USING EXISTING WOOD WALL PANELS.
D25	REMOVE WOOD PANEL FINISH AND WALLS IN PREPARATION FOR NEW STRUCTURAL WORK. PREPARE FOR REFINISHING TO MATCH NEW ADJACENT WALL PANELS.
D26	REMOVE VERTICAL LIFT DOOR AND ALL RELATED MECHANICS, ELECTRICAL CONNECTIONS, AND STRUCTURAL SUPPORT. SALVAGE WOOD PANELING FOR RE-INSTALLATION
D27	SALVAGE, RESTORE, AND STORE EXISTING ARK, LIGHTING AND ELECTRICAL. PREPARE FOR RE-INSTALLATION AT NEW ELEVATION. EXTEND WIRING AND CONTROLS AS REQUIRED.
D41	SALVAGE EXISTING DOOR, FRAME, AND HARDWARE TURN OVER TO OWNER. REMOVE EXISTING INTERIOR DOOR, FRAME, HARDWARE, AND RELATED TRIM AS REQUIRED FOR NEW WORK.
D42	CUT NEW OPENING IN EXISTING WALL FOR NEW DOOR AND FRAME. MATCH EXISTING ADJACENT MATERIAL FINISHES.
D44	DEMOLISH WALL, FLOOR, AND CEILING FINISHES. PREPARE EXISTING FRAMING TO RECEIVE FINISHES AS SCHEDULED.

DEMOLITION KEYNOTES

No.	Description
D45	DEMOLISH EXISTING LOUVER. PREPARE OPENING FOR INSTALLATION OF NEW LOUVER. REFER TO MEP DRAWINGS FOR LOUVER INFORMATION. MATCH EXISTING EXTERIOR DETAILING.
D46	DEMOLISH EXISTING EXTERIOR FINISH AS REQUIRED FOR NEW LOUVER CONFIGURATION, AND ROOF FLASHING, AND COPING.
D88	COORDINATE WITH FOODSERVICE AND MEP DRAWINGS FOR ANY CORING OF SECOND FLOOR SLAB, AND WALL/ROOF PENETRATIONS

DEMOLITION PLAN LEGEND

- EXISTING WALL TO REMAIN
- EXISTING CONSTRUCTION TO BE REMOVED
- EXISTING SLAB TO BE REMOVED
- AREA OF WORK NOT WITHIN PHASE

UTILIZE CHAPEL FOR SEATING DURING CONSTRUCTION

FULL HEIGHT TEMPORARY DUST SEPARATION WALL

PHASE 2A WORK AREA SELECTIVE DEMOLITION AND REMODEL

H1 SECOND FLOO
1/8" = 1'-0"

GENERAL NOTES

1. THE DEMOLITION NOT… REMAIN. IT IS NOT TH… REMOVING ALL QUANT… COLUMNS, STAIRS, DO… THOSE INDICATED ON… VERIFICATION OF EXIS…
2. THIS DRAWING DOES … UNDERSLAB WORK.
3. DIMENSIONS PROVIDE… REMOVAL OF STRUCT…
4. COORDINATE THE WO… PLUMBING, MECHANIC… PLUMBING, AND STRU…
5. PROVIDE BRACING AN… INTEGRITY OF THE BUILDING. PROVIDE TEMPORARY RAILINGS AND FALL PROTECTION TO MAINTAIN ADEQUATE SAFETY PROVISIONS.
6. CONTRACTOR TO COORDINATE WITH OWNER ITEMS TO BE SAVED OR REUSED. COORDINATE LOCATION(S) FOR STORAGE WITH OWNER.
7. REMOVE AND DISCARD EXISTING HM FRAMES AT DEMOLISHED DOORS AS INDICATED ON PLANS.
8. REMOVE AND DISCARD EXISTING CASEWORK U.N.O.
9. REMOVE EXISTING STUD WALLS AS INDICATED.
10. REMOVE EXISTING FLOOR AND CEILING FINISHES U.N.O.
11. MAINTAIN EMERGENCY EGRESS THROUGHOUT DEMOLITION. ALL EXITS SHALL BE READILY ACCESSIBLE AT ALL TIMES.
12. OBEY ALL CODES, STATUTES AND LAWS AS APPLICABLE TO DEMOLITION WORK IN AN OCCUPIED BUILDING AND FOR REMOVAL OF MATERIAL, INCLUDING OSHA REGULATIONS.
13. DISPOSE OF ALL UNWANTED MATERIALS AND OTHER DEMOLITION DEBRIS OFF SITE PER APPLICABLE CODES AND REGULATIONS.
14. OVER DEMOLITION SHALL BE CORRECTED SUCH THAT SURFACES TO BE REBUILT MATCH MATERIAL, STRUCTURAL INTEGRITY, AND APPEARANCE OF THOSE THAT WERE REMOVED.
15. CREATE ROUGH OPENINGS FOR NEW HM FRAMES PER DOOR SCHEDULE.
16. REMOVE EXISTING FINISHES (PAINT, GWB, ETC.) IN AREAS THAT ARE DETERIORATING AND THAT MUST BE REMOVED PRIOR TO THE PROPER APPLICATION OF NEW FINISHES. UNTIL WORKABLE SUBSTRATES OR UNDAMAGED ADJACENT FINISHES ARE REACHED INCLUDING WINDOW JAMBS.
17. PATCH, REPAIR AND PAINT ALL EXISTING PARTITIONS THAT REQUIRE DEMOLITION TO INSTALL SWITCHES, FIRE ALARMS AND ALL OTHER ITEMS. REFER TO ELECTRICAL, MECHANICAL AND PLUMBING PLANS FOR LOCATIONS.
18. CORE EXISTING CONCRETE FLOORING FOR UTILITY PIPING AS REQUIRED. COORDINATE WITH MECHANICAL, ELECTRICAL AND PLUMBING REQUIREMENTS. REFER TO MEP DRAWINGS.
19. COORDINATE ANY WORK AT ADJACENT SPACES OR FLOORS WITH ARCHITECT AND OWNER.
20. PATCH, REPAIR AND FINISH EXPOSED AND DAMAGED SURFACES TO MATCH ADJACENT SURFACE UNLESS NOTED OTHERWISE.
21. CONTRACTOR TO VERIFY AND COORDINATE ALL DIMENSIONS AND WORK OF ALL TRADES PRIOR TO BEGINNING WORK.
22. CAP AND MAKE SAFE ALL EXISTING HVAC, GAS, PLUMBING SUPPLY, WASTE, FIRE PROTECTION, AND ELECTRIC LINES TO BE ABANDONED BELOW EXISTING FLOOR. COORDINATE DISCONNECTION WITH OWNER, ARCHITECT, AND ENGINEER.
23. REFINISH OR REPLACE DAMAGED WALLS AND CEILINGS AS REQUIRED IN ORDER TO OBTAIN A UNIFORM AND UNFLAWED FINISH. PATCHED SURFACES SHALL BE INDISTINGUISHABLE FROM UNAFFECTED AREAS.

GENERAL NOTES - DEMOLITION

24. COORDINATE THE EXACT LOCATION OF DUMPSTERS, CHUTES, AND MATERIALS STORED AT GRADE (IF ANY) WITH THE ARCHITECT AND BUILDING OWNER IN THE FIELD, PRIOR TO PLACEMENT.
25. COORDINATE ACCEPTABLE USE OF STAIRS, HALL, COMMON SPACES OUTSIDE THE WORK AREA DURING DEMOLITION WITH THE ARCHITECT AND BUILDING OWNER IN THE FIELD PRIOR TO START OF WORK. PROTECT SUCH SPACES AS REQUIRED.
26. ALL WINDOW TREATMENTS AND ASSOCIATED HARDWARE TO BE REMOVED AND DISPOSED OF BY THE CONTRACTOR.
27. EXISTING STEEL STRUCTURE AND FIREPROOFING TO REMAIN IN PLACE U.N.O. PATCH FIREPROOFING AS REQUIRED TO MAINTAIN RATING.
28. PROTECT AND MAINTAIN FIBER-OPTIC TEL DATA SERVICE LINES AND CONDUITS THROUGHOUT. SERVICE CAN NOT BE INTERRUPTED.
29. THE DAILY OPERATIONS OF THE OWNER (AND ITS OCCUPANTS) MUST NOT BE DISRUPTED. THROUGHOUT THE PROJECT CONSTRUCTION TRAFFIC AND BUILDING ACCESS MUST BE COORDINATED WITH THE ARCHITECT AND BUILDING OWNER.
30. REMOVE EXISTING ELECTRICAL WIRING, OUTLETS, AND DEVICES WHERE THEY INTERFERE WITH NEW CONSTRUCTION. REFER TO ELECTRICAL DRAWINGS FOR EXTENT OF WORK.
31. CONTRACTOR IS RESPONSIBLE FOR ALL TEMPORARY PARTITIONS IN ORDER TO ISOLATE WORK ZONES. WEATHER-TIGHT, AND AS DICTATED BY PHASING AND OCCUPANCY. SUBMIT FOR ARCHITECT AND OWNER APPROVAL, A PLAN AND SCHEDULE SHOWING THE VARIOUS TEMPORARY PARTITIONS, TYPES, DOORS, LOCATIONS, AND WEATHER-TIGHT MEANS AND METHODS. THIS SUBMITTAL DOES NOT NEGATE THE CONTRACTOR FROM PROVIDING ANY AND ALL TEMPORARY PARTITIONS TO ENSURE A WEATHER-TIGHT AND SAFE ENVIRONMENT FOR THE OCCUPANTS AND CONTENTS OF THE BUILDINGS.
32. THE TEMPORARY PARTITIONS INDICATED ON THE DOCUMENTS ARE SUGGESTED LOCATIONS TO COMPLY WITH CODE AND ASSUMED ACTIVITIES. THEY ARE IN NO WAY INTENDED TO SHOW THE FULL EXTENT OR LOCATIONS, TYPES AND QUANTITIES OF TEMPORARY PARTITIONS, BARRIERS AND PROTECTION THAT MAY BE NECESSARY TO ISOLATE THE WORK FROM ONGOING ACTIVITIES. THE CONTRACTOR IS SOLELY RESPONSIBLE TO PROVIDE THE NECESSARY TEMPORARY SAFEGUARDS REQUIRED TO MEET CODE AND COORDINATE THE LOCATIONS AND EXTENT OF PROTECTION REQUIRED FOR THE WORK INDICATED ON THE DOCUMENTS.

GENERAL NOTES - DEMOLITION

33. DASHED LINES WITH ASSOCIATED TAG OR NOTE INDICATE CONSTRUCTION TO BE DEMOLISHED AND REMOVED.
34. OVER DEMOLITION SHALL BE CORRECTED SUCH THAT SURFACES TO BE REBUILT MATCH MATERIAL, STRUCTURAL INTEGRITY, AND APPEARANCE OF THOSE THAT WERE REMOVED.
35. ALL FLOORING WITHIN SCOPE TO BE PREPARED FOR NEW FLOORING. REFER TO FINISH SCHEDULE FOR NEW FLOORING TYPE. REFER TO FLOORING SPECIFICATIONS FOR REQUIRED PREPARATION TO BE USED FOR EACH FLOORING TYPE.
36. DASHED LINES WITH ASSOCIATED TAG INDICATE CONSTRUCTION TO BE DEMOLISHED AND REMOVED.
37. ALL SHUTDOWNS OF MECHANICAL, SPRINKLER, FIRE ALARM AND ELECTRICAL SYSTEMS SHALL BE COORDINATED WITH THE OWNER. COMPLY WITH AUTHORITY HAVING JURISDICTION REQUIREMENTS PER NOTIFICATION, FIREWATCH, RE-POSTING, ETC.
38. COORDINATE EXTENT OF FLOOR DEMOLITION WITHSTRUCTURAL, ELECTRICAL AND PLUMBING DRAWINGS. PATCH ALL DISTURBED FLOORING TO MATCH EXISTING AND AS REQUIRED TO RECEIVE NEW FLOORING. SEE MEP AND STRUCTURAL DRAWINGS.
39. TYPICAL FLOORING INFILL. INFILL ALL EXISTING FLOOR BOXES, UNUSED PENETRATIONS AND SLAB IRREGULARITIES WITH LIGHTWEIGHT OR ELASTOMERIC CONCRETE FILL AS APPLICABLE. FINISH AS REQUIRED TO RECEIVE NEW FLOORING.

0 4 8 16

Code Consultant
P. R. SHERMAN, P.E.
P.O. BOX 216
ELKINS, NH 03233-0216
603-526-6190

Kitchen Consultant
RICCA DESIGN STUDIOS
515 WASHINGTON STREET
NORWELL, MA 02061
303-621-6327

Landscape Architect
STIMSON
288 NORFOLK STREET
CAMBRIDGE, MA 02139
617 876 8950

Civil Engineer
DONALD G. BOHNING & ASSOCIATES
7879 PUB PARKWAY
VALLEY VIEW, OH 44125
216-642-1130

Mechanical, Electrical, & Plumbing Engineer
KARPINSKI ENGINEERING
3135 EUCLID AVENUE
CLEVELAND, OH 44115
216-391-3700

Structural Engineer
GILSANZ MURRAY STEFICEK, LLP
129 WEST 27TH STREET
NEW YORK, NY 10001
212-254-0030

CENTERBROOK
Architects and Planners, LLP
67 Main Street
Post Office Box 955
Centerbrook, Connecticut 06409-0955
Telephone 860.767.0175
Facsimile 860.767.8719

THE PARK SYNAGOGUE
27500 SHAKER BOULEVARD
PEPPER PIKE, OHIO 44124

ISSUED:

No	Name	Date

PHASE:
SITE DEVELOPMENT PLAN APPROVAL

DRAWING NAME:
SITE PHASE 2A

JOB # 1721

© 2021 CENTERBROOK ARCHITECTS AND PLANNERS

DRAWN BY: KL/MGM | DATE: 06/18/2021
CHECKED BY: MS | SCALE: As indicated

SHEET:
PH.2A

© Mead and Hunt 2021 Park Synagogue Exit Building A/B
5/26/2021 6:41:38 PM

PHASE 2B - MAIN SANCTUARY RENOVATION 3/15/22 THROUGH 9/7/22

FULL HEIGHT TEMPORARY DUST SEPARATION WALL

PHASE 2B WORK AREA SELECTIVE DEMOLITION AND REMODEL

UTILIZE RENOVATED SOCIAL HALL FOR SEATING DURING CONSTRUCTION

FLOOR PLAN LEGEND

- AREA OF EXISTING CONSTRUCTION TO REMAIN
- EXISTING CONSTRUCTION
- NEW CONSTRUCTION
- BUILT-IN MILLWORK
- ALTERNATE - SEE SPECIFICATION AND NOTES FOR ADDITIONAL INFORMATION.
- EXISTING DOOR TO REMAIN
- NEW DOOR, SEE DOOR SCHEDULE

K1 ENLARGED SANCTUARY AND PAVILION PLAN
1/8" = 1'-0"

Code Consultant
P. R. SHERMAN, P.E.
P.O. BOX 216
ELKINS, NH 03233-0216
603-526-6190

Kitchen Consultant
RICCA DESIGN STUDIOS
515 WASHINGTON STREET
NORWELL, MA 02061
303-621-6327

Landscape Architect
STIMSON
288 NORFOLK STREET
CAMBRIDGE, MA 02139
617 876 8960

Civil Engineer
DONALD G. BOHNING & ASSOCIATES
7979 PUB PARKWAY
VALLEY VIEW, OH 44125
216-642-1130

Mechanical, Electrical, & Plumbing Engineer
KARPINSKI ENGINEERING
3135 EUCLID AVENUE
CLEVELAND, OH 44115
216-391-3700

Structural Engineer
GILSANZ MURRAY STEFICEK, LLP
129 WEST 27TH STREET
NEW YORK, NY 10001
212-254-0030

CENTERBROOK
Architects and Planners, LLP
67 Main Street
Post Office Box 955
Centerbrook, Connecticut 06409-0955
Telephone 860.767.0175
Facsimile 860.767.8719

THE PARK SYNAGOGUE
27500 SHAKER BOULEVARD
PEPPER PIKE, OHIO 44124

ISSUED:

No	Name	Date

PHASE:
SITE DEVELOPMENT PLAN APPROVAL

DRAWING NAME:
SITE PHASE 2B

JOB #: 1721

© 2021 CENTERBROOK ARCHITECTS AND PLANNERS

DRAWN BY: KL/MGM
DATE: 06/18/2021
CHECKED BY: MS
SCALE: 1/8" = 1'-0"

SHEET:
PH.2B

PHASE 3A - NEW BUILDING CONSTRUCTION 9/27/21 THROUGH 9/7/22

PHASE 3A - CONSTRUCT NEW COMMUNITY HALL

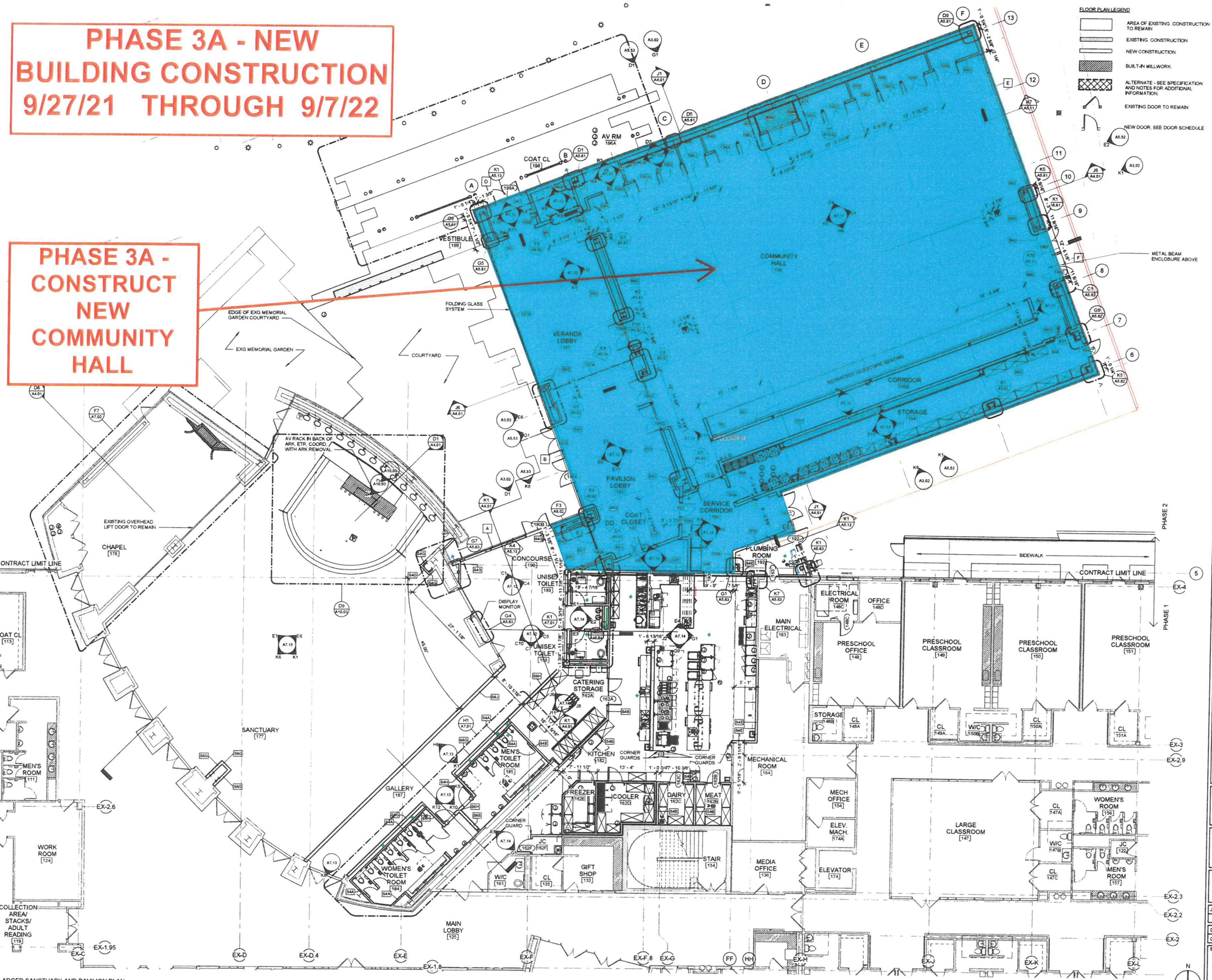

Code Consultant
P. R. SHERMAN, P.E.
P.O. BOX 216
ELKINS, NH 03233-0216
603-526-6190

Kitchen Consultant
RICCA DESIGN STUDIOS
515 WASHINGTON STREET
NORWELL, MA 02061
303-621-6327

Landscape Architect
STIMSON
288 NORFOLK STREET
CAMBRIDGE, MA 02139
617 876 8950

Civil Engineer
DONALD G. BOHNING & ASSOCIATES
7979 PUB PARKWAY
VALLEY VIEW, OH 44125
216-642-1130

Mechanical, Electrical, & Plumbing Engineer
KARPINSKI ENGINEERING
3135 EUCLID AVENUE
CLEVELAND, OH 44115
216-391-3700

Structural Engineer
GILSANZ MURRAY STEFICEK, LLP
129 WEST 27TH STREET
NEW YORK, NY 10001
212-254-0030

CENTERBROOK
Architects and Planners, LLP
67 Main Street
Post Office Box 955
Centerbrook, Connecticut 06409-0955
Telephone 860.767.0175
Facsimile 860.767.8719

THE PARK SYNAGOGUE
27500 SHAKER BOULEVARD
PEPPER PIKE, OHIO 44124

ISSUED:

No	Name	Date

PHASE:
SITE DEVELOPMENT PLAN APPROVAL

DRAWING NAME:
SITE PHASE 3A

JOB # 1721

© 2021 CENTERBROOK ARCHITECTS AND PLANNERS

DRAWN BY: KL/MGM | DATE: 06/18/2021
CHECKED BY: MS | SCALE: 1/8" = 1'-0"

SHEET:
PH.3A

SHAKER BOULEVARD

PROPERTY LINE (TYP.)

13,839 sf WT

9,820 sf FF

7,700 sf LH2

10,320 sf WT

404 sf LH

740 sf LH

19,355 sf LH

2,082 sf BA

4,018 sf LH

1,579 sf FP

33,102 sf LH2

PROPOSED ADDITION

LOAM AND SEED ALL DISTURBED AREAS, TYP.

200,770.4 sf

EXISTING PARK SYNAGOGUE EAST BUILDING

5,283 sf FP

5,400 sf LH

9,301 sf FP

PHASE 3B WORK AREA

PHASE 3C WORK AREA

BRAINARD ROAD

2,347 sf FP

PROPERTY LINE (TYP.)

7,353 sf LH2

1,461 sf WT

1,482 sf FP

50' SETBACK

1,075 sf FP

175,788.7 sf

LOAM AND SEED ALL DISTURBED AREAS, TYP.

LOAM AND SEED ALL DISTURBED AREAS, TYP.

E.L.

E.L.

PHASE 3B & 3C - SITEWORK PAVING AND LANDSCAPING 5/1/22 THROUGH 9/7/22

TREES	BOTANICAL / COMMON NAME	CONT	CAL	QTY
AG	Acer griseum / Paperbark Maple	B & B	2.5-3" CAL	2
AS	Acer saccharum / Sugar Maple	B & B	3.5-4" CAL	4
CC	Carpinus caroliniana / American Hornbeam	B & B	2.5-3"CAL	5
CO	Celtis occidentalis / Common Hackberry	B & B	2.5-3"CAL	14
CM	Cornus mas / Cornelian Cherry	B & B	2.5-3"CAL	5
CV	Crataegus viridis 'Winter King' / Winter King Hawthorn	B & B	2.5-3"CAL	6
GS	Gleditsia triacanthos 'Skyline' / Skyline Honey Locust	B & B	3.5-4" CAL	4
GK	Gymnocladus dioica / Kentucky Coffeetree	B & B	3.5-4" CAL	3
HV	Hamamelis virginiana / Common Witch Hazel	B & B	2.5-3"CAL	5
MI	Malus ioensis / Praire Crabapple	B & B	2.5-3"CAL	3
PP	Parrotia persica / Persian Parrotia	B & B	2.5-3"CAL	1
PS	Prunus subhirtella / Higan Cherry	B & B	2.5-3"CAL	4
QB	Quercus bicolor / Swamp White Oak	B & B	2.5-3"CAL	2
QR	Quercus rubra / Red Oak	B & B	2.5-3"CAL	8
TP	Thuja plicata / Western Red Cedar	B & B	7'-8' HT	10

GROUND COVERS	BOTANICAL / COMMON NAME	CONT	SPACING	QTY
	Liriope muscari 'Big Blue' / Big Blue Lily Turf	#1	12" O.C.	100
	Lawn Sod High Use	sod		50,455 SF
	Taxus x media 'Everlow' / Everlow Yew	#3	36" OC	85
SEED MIXES	BOTANICAL / COMMON NAME	CONT	SPACING	QTY
	Festuca ovina 'Covar' / Covar Sheep Fescue	SEED		46,138 sf
	Lawn seed mix / High-Use Lawn	SEED		53,812 sf
	Wetland Seed Wetland Seed Mix / Wetland Seed Mix	SEED		25,619 sf
BIOSWALE AREA	BOTANICAL / COMMON NAME	CONT	SPACING	4,094 SF
BA	Asclepias incarnata / Swamp Milkweed	PL	4' O.C.	142
	Carex stipa / Common Fox Sedge	PL	4' O.C.	142
	Cornus racemosa / Gray Dogwood	#5	4' O.C.	47
	Cornus sericea / Red Osier Dogwood	#5	4' O.C.	30
	Cornus stolonifera / Red Twig Dogwood	#5	4' O.C.	47
	Eupatorium maculatum / Joe Pye Weed	PL	30" O.C.	52
	Hamamelis virginiana / Common Witch Hazel	#5	4' O.C.	20
	Hydrangea arborescens / Smooth Hydrangea	#5	4' O.C.	20
	Ilex verticillata / Winterberry Holly	#5	4' O.C.	47
	Panicum virgatum / Switch Grass	PL	30" O.C.	52
	Rhododendron 'P.J.M.' / PJM Hybrid Rhododendron	#5	4' O.C.	20
	Rhus aromatica 'Gro Low' / Gro Low Sumac	#5	4' O.C.	20
	Sambucus canadensis / Elderberry	#5	4' O.C.	47
	Viburnum acerifolium / Mapleleaf viburnum	#5	4' O.C.	47
	Viburnum prunifolium / Blackhaw Viburnum	#5	4' O.C.	40

0 15 30 75 ft

N

Code Consultant
PHILIP R. SHERMAN, P.E.
P.O. BOX 216
ELKINS, NH 03233-0216
603-526-6190

Kitchen Consultant
RICCA DESIGN STUDIOS
515 WASHINGTON STREET
NORWELL, MA 02061
303-621-6327

Landscape Architect
STEPHEN STIMSON ASSOCIATES
288 NORFOLK STREET
CAMBRIDGE, MA 02139
617-876-8960

Civil Engineer
DONALD G. BOHNING & ASSOCIATES
7979 PUB PARKWAY
VALLEY VIEW, OH 44125
216-642-1130

Mechanical, Electrical, & Plumbing Engineer
KARPINSKI ASSOCIATES, INC.
3135 EUCLID AVENUE
CLEVELAND, OH 44115
216-391-3700

Structural Engineer
GILSANZ MURRAY STEFICEK, LLP
129 WEST 27TH STREET
NEW YORK, NY 10001
212-254-0030

CENTERBROOK
Architects and Planners, LLP
67 Main Street
Post Office Box 955
Centerbrook, Connecticut 06409-0955
Telephone 860.767.0175
Facsimile 860.767.8719

THE PARK SYNAGOGUE
27500 SHAKER BOULEVARD
PEPPER PIKE, OHIO 44124

ISSUED:

No	Name	Date

PHASE:
SITE DEVELOPMENT PLAN APPROVAL

DRAWING NAME:
SITE PHASE 3B/3C

JOB # 1721

© 2021 CENTERBROOK ARCHITECTS AND PLANNERS

DRAWN BY: SC/RI
DATE: 06/18/2021
CHECKED BY: JW
SCALE: 1" = 30'-0"

SHEET:
PH.3B

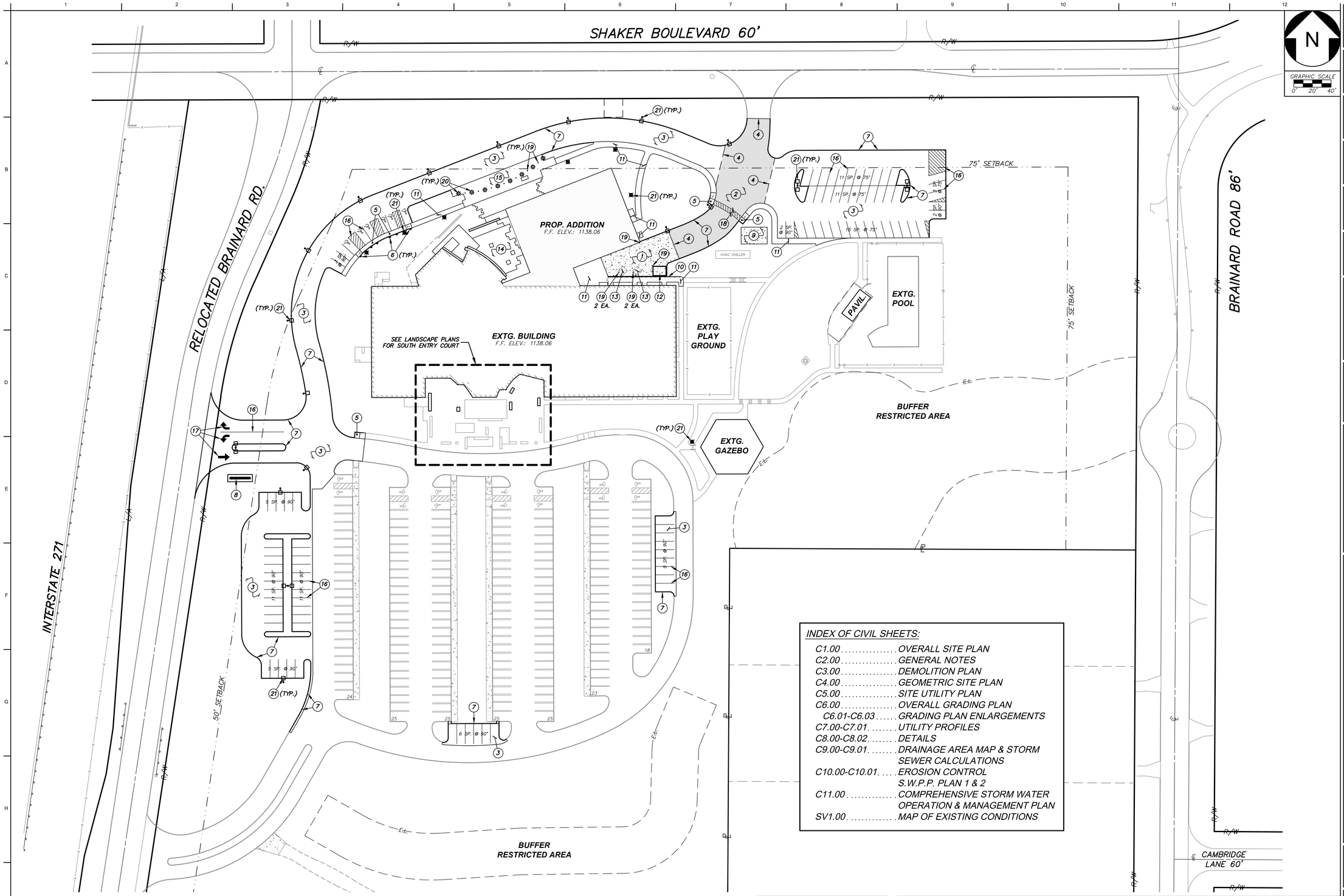

INDEX OF CIVIL SHEETS:

C1.00 ..... OVERALL SITE PLAN
C2.00 ..... GENERAL NOTES
C3.00 ..... DEMOLITION PLAN
C4.00 ..... GEOMETRIC SITE PLAN
C5.00 ..... SITE UTILITY PLAN
C6.00 ..... OVERALL GRADING PLAN
C6.01-C6.03 ..... GRADING PLAN ENLARGEMENTS
C7.00-C7.01 ..... UTILITY PROFILES
C8.00-C8.02 ..... DETAILS
C9.00-C9.01 ..... DRAINAGE AREA MAP & STORM SEWER CALCULATIONS
C10.00-C10.01 ..... EROSION CONTROL S.W.P.P. PLAN 1 & 2
C11.00 ..... COMPREHENSIVE STORM WATER OPERATION & MANAGEMENT PLAN
SV1.00 ..... MAP OF EXISTING CONDITIONS

NOTES:

1. SEE SHEET C4.00 GEOMETRIC SITE PLAN FOR LAYOUT INFORMATION AND CONTROL.
2. FINAL LOCATION OF ALL LIGHT POLES TO BE DETERMINED IN THE FIELD BY THE CONSTRUCTION MANAGER AND CONTRACTOR TO AVOID UTILITY CONFLICTS THAT MAY ARISE. CONFIRM LOCATIONS WITH PHOTOMETRIC AND ELECTRICAL DRAWINGS.

PARKING SUMMARY

PARKING	STANDARD	A.D.A.
EXISTING STALLS	165	14
PROPOSED STALLS	94	6
TOTAL:	**259**	**20**
***REQUIRED:**	**225**	**7**

*CODIFIED ORDINANCE 1272.03:
1 STALL/2 SEATS (IN WORSHIP HALL)
(450 SEATS/2 = 225 STALLS)

LEGEND (1)

NO.	DESCRIPTION	NO.	DESCRIPTION
1	8" THICK REINFORCED CONCRETE PAD	11	CONCRETE SIDEWALK, 4" REINFORCED WITH AGGREGATE BASE, FROST SLABS AT ALL DOORWAYS
2	HEAVY DUTY ASPHALT PAVEMENT	12	PROPOSED SHED, BY OTHERS
3	STANDARD DUTY ASPHALT PAVEMENT	13	PROPOSED DUMPSTER LOCATION, DUMPSTER BY OWNER
4	LIMIT OF HEAVY DUTY ASPHALT	14	PROPOSED COURTYARD, SEE LANDSCAPE PLANS
5	A.D.A. ACCESSIBLE RAMP	15	PROPOSED DROP-OFF ZONE, SEE LANDSCAPE PLANS
6	A.D.A. ACCESSIBLE SIGNAGE, 1 VAN ACCESSIBLE SIGN PLACED LEFT OF AN 8' WIDE "NO PARKING" ZONE AREA (AS DETERMINED BY OWNER)	16	WHITE PAINTED LINES, (TYP.)
7	6"x18" CONCRETE CURB	17	WHITE PAINTED ARROWS, (TYP.)
8	RELOCATED SIGNAGE, SEE LANDSCAPE PLANS	18	5' WIDE PAINTED CROSS WALK (WHITE)
9	ELECTRICAL EQUIPMENT PAD	19	PROPOSED BOLLARDS (TYP.)
10	RAILING, SEE LANDSCAPE PLANS	20	PROPOSED BOLLARD LIGHTING (TYP.) COORDINATE WITH ELECTRICAL & LIGHTING PLANS
		21	PROPOSED LIGHT POLE (TYP.) COORDINATE WITH ELECTRICAL & LIGHTING PLANS

Code Consultant
PHILIP R. SHERMAN, P.E.
P.O. BOX 216
ELKINS, NH 03233-0216
603-526-6190

Kitchen Consultant
RICCA DESIGN STUDIOS
515 WASHINGTON STREET
NORWELL, MA 02061
303-621-6327

Landscape Architect
STEPHEN STIMSON ASSOCIATES
15 DEPOT AVENUE
FALMOUTH, MA 02540
508-548-8119

Civil Engineer
DONALD G. BOHNING & ASSOCIATES
7979 PUB PARKWAY
VALLEY VIEW, OH 44125
216-642-1130

Mechanical, Electrical, & Plumbing Engineer
KARPINSKI ENGINEERING
3135 EUCLID AVENUE
CLEVELAND, OH 44115
216-391-3700

Structural Engineer
GILSANZ MURRAY STEFICEK, LLP
129 WEST 27TH STREET
NEW YORK, NY 10001
212-254-0030

CENTERBROOK
Architects and Planners, LLP
67 Main Street
Post Office Box 955
Centerbrook, Connecticut 06409-0955
Telephone 860.767.0175
Facsimile 860.767.8719

STATE OF OHIO · EDWARD J. KISIEL · WISE E-61631 · REGISTERED PROFESSIONAL ENGINEER

THE PARK SYNAGOGUE
27500 SHAKER BOULEVARD PEPPER PIKE, OHIO 44124

ISSUED:

No	Name	Date

PHASE:
SITE DEVELOPMENT PLAN APPROVAL

DRAWING NAME:
OVERALL SITE PLAN

JOB #: 1721 (DGB#3406-8)

© 2021 CENTERBROOK ARCHITECTS AND PLANNERS

DRAWN BY: TM | DATE: 06/30/2021
CHECKED BY: EK | SCALE: AS NOTED

SHEET:
C1.00

M:\Jobsdat\p\3000-3499\3406-8\dwg\3406C8 C1.0.dwg 6/16/2021 - 1:24pm

GENERAL

SUBSOIL INVESTIGATION

ALL CONTRACTORS, PRIOR TO SUBMITTING BIDS FOR THIS IMPROVEMENT, WILL BE PERMITTED TO DIG TEST HOLES WITHIN THE LIMITS OF THIS PROPOSED WORK. AT LEAST 48 HOUR NOTICE MUST BE GIVEN TO THE OWNER, AND THE LOCATION OF ALL TEST HOLES IS SUBJECT TO THE APPROVAL OF THE OWNER. THE CONTRACTOR SHALL BE RESPONSIBLE FOR ALL DAMAGE RESULTING FROM DIGGING THESE HOLES AND HE SHALL RESTORE ALL PROPERTY TO A CONDITION SIMILAR OR EQUAL TO THAT EXISTING BEFORE SUCH DIGGING WAS DONE. ROCK EXCAVATION SHALL NOT BE PAID FOR AS A SEPARATE ITEM, BUT SHALL BE INCLUDED IN THE UNIT PRICE BID FOR OTHER VARIOUS ITEMS.

CONSTRUCTION AND MATERIAL SPECIFICATIONS

WHERE IN ANY CASE THE PLANS AND SPECIFICATIONS DO NOT ENTIRELY COVER MATERIALS AND/OR WORKMANSHIP, THE "STATE OF OHIO, DEPARTMENT OF TRANSPORTATION, CONSTRUCTION AND MATERIAL SPECIFICATIONS," LATEST EDITION WILL APPLY. THROUGHOUT THE PLANS THE REFERENCE TO SPECIFIC ODOT ITEM NUMBERS ARE INDICATED. MATERIAL AND WORKMANSHIP SHALL ALSO CONFORM TO THE ENGINEERING DESIGN AND CONSTRUCTION STANDARDS OF THE CUYAHOGA COUNTY SANITARY ENGINEER, AND THE ORDINANCES OF PEPPER PIKE. WHERE CONFLICTS OCCUR IN THE ABOVE, THE OWNER SHALL DETERMINE THE GOVERNING AUTHORITY. ANY DEFECTS IN THE CONSTRUCTION INCLUDING MATERIALS OR WORKMANSHIP SHALL BE REPAIRED OR REPLACED AS DIRECTED BY THE OWNER. REFERENCE THROUGHOUT THESE PLANS TO "THE ENGINEER" SHALL BE REPRESENTIVE OF THE OWNER AND/OR HIS ENGINEER.

ELEVATION DATUM

ALL ELEVATIONS SHOWN ON THESE PLANS ARE IN FEET ABOVE THE "U.S.G.S." DATUM PLANE.

UTILITIES

THE FOLLOWING IS BELIEVED TO BE THE LIST OF UTILITY OWNERS WITHIN THE LIMITS OF CONSTRUCTION:

CITY OF CLEVELAND
DEPARTMENT OF PUBLIC UTILITIES
DIVISION OF WATER
1201 LAKESIDE AVENUE
CLEVELAND, OHIO 44114
PHONE: (216)664–2444

THE ILLUMINATING CO.
6896 MILLER ROAD
BRECKSVILLE, OHIO 44141
PHONE: (440)546–8748

CUYAHOGA COUNTY SANITARY ENGINEER
6100 CANAL ROAD
VALLEY VIEW, OHIO 44125
PHONE: (216)443–8211

ADELPHIA CABLE COMMUNICATIONS
885 EAST HIGHLAND ROAD
MACEDONIA, OHIO 44056
PHONE: (330)929–2871

DOMINION EAST OHIO
1201 EAST 55TH ST.
CLEVELAND, OHIO 44103
PHONE: (216)736–6675

CITY OF PEPPER PIKE
28000 SHAKER BLVD.
PEPPER PIKE, OHIO 44124
PHONE: (216)831–8500

ANY AND ALL WORK REQUIRED FOR REMOVAL, RELOCATION AND/OR NEW CONSTRUCTION OF FACILITIES FOR PRIVATE UTILITIES WILL BE DONE BY AND AT THE EXPENSE OF THE RESPECTIVE OWNERS UNLESS OTHERWISE NOTED ON THE PLANS. THE PROCEDURE AS OUTLINED IN OHIO REVISED CODE SECTION 163.64, REGARDING UTILITY IDENTIFICATION SHALL BE FOLLOWED. NAMELY, THE OWNER'S REPRESENTATIVE WILL NOTIFY THE OWNERS OF UNDERGROUND UTILITY FACILITIES OF THE IMPENDING PROJECT. THE CONTRACTOR MUST NOTIFY THE UNDERGROUND UTILITY PROTECTION SERVICE AND THE INDIVIDUAL UTILITY 48 HOURS PRIOR TO COMMENCING WORK. THE UNDERGROUND UTILITY OWNER MUST STAKE, MARK OR OTHERWISE DESIGNATE THE LOCATION OF ITS FACILITY. THE LOCATIONS OF UNDERGROUND UTILITIES SHOWN ON THESE PLANS HAVE BEEN OBTAINED BY DILIGENT FIELD CHECKS AND SEARCHES OF AVAILABLE RECORDS. **(1–800–362–2764)**

STATIONING AND LOCATIONS

STATIONING AND LOCATIONS INDICATED ON THESE PLANS ARE APPROXIMATE. ALL LOCATIONS AND ITEMS CALLED OUT BY STATION ARE SUBJECT TO ADJUSTMENT IN THE FIELD "AS DIRECTED BY THE OWNER."

PRE–CONSTRUCTION CONFERENCE

AT LEAST FIVE DAYS PRIOR TO THE START OF ACTUAL CONSTRUCTION WORK, A PRE–CONSTRUCTION CONFERENCE SHALL BE HELD AT THE DIRECTION OF THE OWNER WITH THE CUYAHOGA COUNTY SANITARY ENGINEER, CITY OF PEPPER PIKE, AND THE OWNER'S REPRESENTATIVES. THE CONTRACTOR OR HIS AUTHORIZED SUPERINTENDENT SHALL BE PRESENT, ALONG WITH ANY AND ALL PRIVATE UTILITY COMPANY REPRESENTATIVES. THIS MEETING WILL BE FOR CO–ORDINATION AND PROCEDURE REVIEW PRIOR TO COMMENCING ANY PHYSICAL WORK.

INSPECTION

THE COST OF ALL INSPECTION, PERMITS, OR TESTS SHALL BE PAID BY THE CONTRACTOR AND INCLUDED IN THE UNIT PRICE BID, UNLESS NOTED OTHERWISE. THE INITIAL PAYMENT FOR INSPECTION OR TESTING SHALL BE PAID FROM A DEPOSIT MADE BY THE CONTRACTOR TO THE APPROPRIATE AGENCY. NO FINAL ESTIMATE WILL BE ISSUED UNTIL ALL FEES FOR INSPECTION AND TESTING HAVE BEEN INVOICED TO THE CONTRACTOR AND PAYMENT FOR SUCH MADE WITH PROOF OF SUCH SUPPLIED TO THE OWNER.

THE CONTRACTOR SHALL NOT COMMENCE WITH ANY FORM OF CONSTRUCTION WITHOUT GIVING 24 HOUR NOTICE TO THE OFFICE OF THE OWNER TO ARRANGE FOR INSPECTION (IF APPLICABLE). IF ANY CHANGES IN THE WORK SCHEDULE BECOME NECESSARY, IT WILL BE THE RESPONSIBILITY OF HE CONTRACTOR TO NOTIFY THE INSPECTOR TO AVOID UNNECESSARY INSPECTION COSTS. IF NO NOTIFICATION IS MADE IN REGARDS TO CANCELLATION OF WORK, THE CONTRACTOR WILL BE CHARGED FOR THE INSPECTION TIME INCURRED.

PRECAUTION AGAINST UTILITY DAMAGE

THE CONTRACTOR SHALL TAKE ALL NECESSARY PRECAUTIONS, AT NO EXPENSE TO THE OWNER, TO AVOID DAMAGE TO EXISTING UNDERGROUND UTILITY LINES DURING THE INSTALLATION OF THE PROPOSED IMPROVEMENTS. IT MAY BE NECESSARY TO CHANGE THE ALIGNMENT OR THE FLOW LINE ELEVATION OF PROPOSED SEWERS DUE TO VARIOUS EXISTING UTILITY LINES. THE CONTRACTOR SHALL MAKE INVESTIGATIONS TO DETERMINE THE LOCATION OF EXISTING UTILITY LINES PRIOR TO THE INSTALLATION OF THE PROPOSED IMPROVEMENTS. SUCH INVESTIGATIONS SHALL BE AT NO ADDITIONAL COST TO THE OWNER.

DUST CONTROL

THE CONTRACTOR SHALL SUPPLY ALL LABOR, MATERIAL, AND EQUIPMENT NECESSARY, SUCH AS CALCIUM CHLORIDE, WATER, OR A MOTORIZED DUST–FREE STREET SWEEPING DEVICE, AS DIRECTED BY THE OWNER, TO MAINTAIN ALL ROADWAYS BEING USED FOR ACCESS TO THE CONSTRUCTION SITE. PAYMENT FOR ALL DUST CONTROL MEASURES SHALL BE INCLUDED IN THE UNIT PRICE BID FOR OTHER VARIOUS ITEMS.

MAINTAINING TRAFFIC

THE CONTRACTOR SHALL FURNISH AND MAINTAIN ALL NECESSARY SAFEGUARDS SUCH AS BARRICADES, SATISFACTORY BARRIERS, LIGHTING, FLAGMEN, TEMPORARY GUARDRAIL, AND SUCH OTHER TRAFFIC CONTROL DEVICES AS PROVIDED IN "ITEM 614 – MAINTAINING TRAFFIC" SO AS TO AVOID DAMAGE AND/OR INJURY TO VEHICLES AND PERSONS USING THE ROADWAY DURING CONSTRUCTION. ALL AREA OF PAVEMENT REMOVAL WHICH HAVE NOT BEEN FULLY RESTORED SHALL BE PROTECTED WITH CONES OR DRUMS DURING DAYLIGHT HOURS. THESE AREAS SHALL BE PROTECTED WITH FLASHING BARRICADES OR DRUMS WITH STEADY BURNING LIGHTS AT NIGHT. PAYMENT FOR LABOR, MATERIAL, AND EQUIPMENT REQUIRED FOR CONSTRUCTION, MAINTENANCE AND SUBSEQUENT REMOVAL WHEREVER OF APPROACHES, BYPASSES, CROSSOVERS, BARRICADES, LIGHTS, SIGNS, AND SIGN SUPPORTS, SHALL BE INCLUDED IN THE PRICE BID FOR VARIOUS ITEMS. THE CONTRACTOR SHALL CONDUCT HIS OPERATIONS AS TO THE PROPOSED WORK WITH A MINIMUM OF HAZARD, DELAY, AND INCONVENIENCE TO THE MOTORISTS USING THE STREETS AFFECTED BY THE WORK DONE UNDER THIS CONTRACT AND HE SHALL CO–ORDINATE ALL CLOSING OF STREETS WITH THE CITY ENGINEER AND THE CITY POLICE CHIEF.

ROADWAY

CLEARING AND GRUBBING

ALL TRESS AND BRUSH, AND ANY OTHER VEGETATION WITHIN THE LIMITS OF THIS PROJECT THAT INTERFERE WITH THE CONSTRUCTION SHALL BE REMOVED FROM THE SITE. STUMPS SHALL BE GROUND OUT OR REMOVED FROM THE SITE.

EARTHWORK

ALL EARTHWORK SHALL HAVE FULL TIME INSPECTION AND TESTING AS APPROVED BY THE OWNER. SUCH INSPECTION WILL BE COORDINATED BY THE CONTRACTOR, WHO SHALL USE A SOILS TESTING LABORATORY TO MAKE TESTS INCIDENTAL TO THE QUALITY CONTROL OF THE EARTHWORK OPERATION. SOIL TESTING AND CLASSIFICATION SHALL BE PERFORMED BY THE SOILS TESTING LABORATORY TO DETERMINE THE PROPER MOISTURE CONTENT AND SOIL DENSITY BEFORE BEGINNING EARTHWORK CONSTRUCTION. THE COST OF THIS INSPECTION AND TESTING WILL BE PAID BY THE CONTRACTOR, THE CONTRACTOR SHALL PRESENT HIS PLAN AND SCHEDULE FOR EARTHWORK OPERATIONS AT THE PRE–CONSTRUCTION CONFERENCE. THE PRICES BID FOR THE VARIOUS EARTHWORK ITEMS SHALL INCLUDE BUT NOT BE LIMITED TO THE FOLLOWING:

1. PREPARING THE SUBGRADE AS DEEMED NECESSARY BY THE GEOTECHNICAL ENGINEER TO ACCEPT EMBANKMENT.
2. DEWATERING THE SUBGRADE, IF NECESSARY, AND MAINTAINING GOOD SURFACE DRAINAGE OF THE CONSTRUCTION AREA.
3. PROOF–ROLLING AND/OR STABILITY VERIFICATION OF ALL SUBGRADES BEFORE AND AFTER EMBANKMENT CONSTRUCTION AND OF ALL EXCAVATED AREAS ACHIEVING SUBGRADE ELEVATION.
4. SPREADING LIFTS NOT TO EXCEED 8 INCHES IN DEPTH AND COMPACTING AT THE SPECIFIED MOISTURE CONTENT UNTIL ITS DENSITY IS NOT LESS THAN 98 PERCENT OF THE MAXIMUM LABORATORY DRY DENSITY AS DETERMINED BY THE STANDARD PROCTOR METHOD OF MOISTURE DENSITY RELATIONSHIP TESTING (ASTM D698). THE WORK SHALL BE DONE USING COMPACTION EQUIPMENT THAT WILL PROVIDE THE REQUIRED IN PLACE DENSITY WITHOUT BREAKING DOWN THE UNDERLYING SOILS.
5. OBTAINING OPTIMUM MOISTURE CONTENT.
6. INCORPORATING EXCESS TRENCH MATERIALS INTO EMBANKMENT CONSTRUCTION.
7. THE REMOVAL OF ANY SEDIMENT FROM DITCHES, SWALES AND CREEKS, WHICH AS DETERMINED BY THE OWNER, RESULTED FROM THESE IMPROVEMENTS.
8. FOLLOW THE GENERAL OUTLINE OF SUCH EARTHWORK OPERATIONS AS INDICATED IN THE PROJECT SITE GEOTECHNICAL REPORT AS SUPPLIED BY OWNER.

WHERE SOFT SUBGRADE IS ENCOUNTERED, DUE TO NO FAULT OR NEGLECT OF THE CONTRACTOR, IN WHICH SATISFACTORY STABILITY CANNOT BE OBTAINED BY MOISTURE CONTROL AND COMPACTION, THE UNSTABLE MATERIAL SHALL BE EXCAVATED TO THE DEPTH REQUIRED BY THE OWNER'S REPRESENTATIVE. BACKFILLING OF THESE EXCAVATED AREAS SHALL BE WITH EMBANKMENT MATERIAL FROM THE CONSTRUCTION PROJECT OR SUITABLE GRANULAR MATERIAL PER ODOT ITEM 203 "AS DIRECTED BY THE OWNER".

IN AREAS OF HIGH GROUNDWATER OR WHERE SURFACE SEEPAGE HAS BEEN OBSERVED IT MAY BE NECESSARY TO CONSTRUCT DRAINS PERPENDICULAR TO THE PROPOSED PAVEMENT. THE UNCLASSIFIED PIPE UNDERDRAINS, CONSTRUCTED IN ACCORDANCE WITH ODOT ITEM 605, SHALL BE 3 FEET BELOW CURB GRADE AND CONNECTED INTO THE APPROPRIATE STORM CONDUIT OR OUTLET. CONDUIT SHALL BE 4" DIAMETER PERFORATED PVC ASTM D 3034 SDR 35 WITH NO. 57 WASHED GRAVEL. (NO SLAG) SUCH USE SHALL ONLY BE AFTER APPROVAL BY OWNER.

UNDERGROUND INSTALLATIONS – GENERAL

UNDERGROUND INSTALLATION

THE UNIT PRICE BID FOR THE VARIOUS UNDERGROUND INSTALLATION ITEMS SHALL INCLUDE, BUT NOT BE LIMITED TO, ALL EXCAVATION, MATERIAL, LABOR, BEDDING, BACKFILL, COMPACTION, EQUIPMENT, UTILITY PROTECTION, MAINTENANCE OF ROADWAYS AND DRIVES UNTIL FINAL REPLACEMENT, PUMPING AND/OR DEWATERING, CONSTRUCTION AND REMOVAL OF ALL NECESSARY TRENCH PROTECTION AND ALL OTHER INCIDENTAL ITEMS NECESSARY TO INSTALL SUCH UTILITY. THE CONTRACTOR IS TO TOTALLY FAMILIARIZE HIMSELF WITH THE GROUND CONDITIONS THAT NOW DO OR MAY EXIST DURING THE CONSTRUCTION SO AS NOT TO ADVERSELY AFFECT THE INTEGRITY OF ANY UTILITY INSTALLATION OR STRUCTURE ON THE CONSTRUCTION SITE OR ADJACENT PROPERTIES.

ALL SANITARY SEWER AND STORM SEWER CONSTRUCTION SHALL CONFORM WITH ODOT ITEM 603 AND SHALL BE INSTALLED ON A FIRM BEDDING FOR ITS FULL LENGTH IN ACCORDANCE WITH ODOT ITEM 603.04 – CLASS B.

ANY UNSUITABLE MATERIAL, MATERIAL NOT APPROVED BY THE OWNER FOR BACKFILL AND MATERIAL IN EXCESS OF THAT REQUIRED FOR BACKFILLING SHALL BE DISPOSED OF BY THE CONTRACTOR ON THE SITE.

TRENCH PROTECTION

THE CONTRACTOR SHALL TAKE ALL PRECAUTIONS TO PREVENT ANY CAVING OR SETTLING OF EXCAVATION OR TRENCH WALLS WHICH COULD ENDANGER THE SAFETY OF ANY PERSON ENGAGED IN THE WORK OR IN ANY WAY DAMAGE THE UNDERGROUND INSTALLATIONS OF ADJACENT UTILITIES OR PROPERTY; OR DIMINISH THE TRENCH WIDTH NECESSARY FOR THE PROPER CONSTRUCTION OF THE UNDERGROUND INSTALLATION OR OTHERWISE INJURE OR DELAY THE WORK. THE TYPE AND AMOUNT OF SUCH PROTECTION, SUCH AS TRENCH BOXES, SHEETING, SHORING, OR BRACING SHALL BE CONSISTENT WITH THE DEPTH AND WIDTH OF EXCAVATION, THE COMPOSITION AND WATER CONTENT OF THE SOIL, THE PROXIMITY OF STRUCTURES OR OTHER UTILITIES, THE VIBRATION FROM EQUIPMENT AND THE SPOIL PLACEMENT, AND SHALL BE IN ACCORDANCE WITH THE LATEST OSHA REGULATIONS.

IN ORDER TO REDUCE GROUND WATER SEEPAGE AND PROVIDE A STABLE TRENCH BOTTOM, IT MAY BE NECESSARY TO DEWATER PRIOR TO EXCAVATION OF THE SEWER TRENCH AND/OR PROVIDE TEMPORARY SUMPS. THE CONTRACTOR SHALL BE RESPONSIBLE FOR ANY DAMAGE TO ADJACENT STRUCTURES, PAVEMENTS, OR UTILITIES, OR LOSS OF PRIVATE WELL WATER RESULTING FROM DEWATERING, LOSS OF GROUND, HEAVE, TRENCH CONSTRUCTION, OR ANY OTHER CONSTRUCTION METHODS. THE CONTRACTOR SHALL PROTECT ALL EXISTING SEWERS AND UTILITIES THAT THE PROPOSED INSTALLATION CROSSES BY COMPACTING THE BACKFILL UNDER SUCH EXISTING FACILITY OR SHALL PROTECT THE EXISTING FACILITY IN A MANNER AS APPROVED BY THE OWNER. IF SHEETING IS USED, IT MAY BE NECESSARY TO DRIVE THE SHEETING SEVERAL FEET BELOW THE BOTTOM OF THE PIPE. WHEN USING MOVABLE TRENCH SUPPORTS OR SHEETING, CARE SHALL BE EXERCISED SO AS NOT TO DISTURB THE PIPE LOCATION, JOINTING OR BEDDING MATERIAL. IF STEEL PILE SHEETING IS USED, IT SHALL BE HELD IN PLACE BY LONGITUDINAL BEAMS AND CROSS BRACES OR STRUTS AS REQUIRED TO RESTRAIN THE TOP OF THE SHEETING. IF TIMBER SHEETING AND BRACING IS USED, IT MUST BE OF A GOOD QUALITY AND OF HARDWOOD CONSTRUCTION. AFTER THE PIPE HAS BEEN INSTALLED AND THE BALANCE OF THE BEDDING MATERIAL HAS BEEN PLACED OVER THE PIPE, THE REMOVAL OF ANY TRENCH PROTECTION SHALL BE CAREFULLY CONTROLLED. THE CONTRACTOR SHALL DEMONSTRATE THAT THE REMOVAL OF THE TRENCH PROTECTION WILL NOT ADVERSELY AFFECT THE PIPE LOCATION AND BEDDING. IF SHEETING CANNOT BE REMOVED WITHOUT ADVERSELY AFFECTING THE PIPE LOCATION, THE OWNER MAY ORDER THE SHEETING CUT OFF AT SOME POINT, AT LEAST ONE FOOT ABOVE THE TOP OF THE PIPE AND LEFT IN PLACE AT NO ADDITIONAL COST.

MAINTENANCE OF EXISTING SEWER SYSTEMS

PRIOR TO ANY CONNECTION INTO AN EXISTING SEWER MANHOLE OR CONDUIT THE CONTRACTOR SHALL TAKE SUCH MEASURES AS NECESSARY, "AS APPROVED BY THE GOVERNING AUTHORITY, (I.E. TEMPORARY PLUGS, SAND BAGS, ETC.) DURING THE COURSE OF THE CONSTRUCTION OF THE PROPOSED SEWERS, TO GUARD AGAINST ANY DRAINAGE FROM ENTERING THE EXISTING SYSTEM AND POSSIBLY CONTAMINATING SUCH SYSTEM WITH SILT. ALL WORK AND MATERIAL NECESSARY TO GUARANTEE THIS CONDITION SHALL BE INCLUDED IN THE VARIOUS ITEMS BID.

SUBBEDDING MATERIAL

THE SUBBEDDING MATERIAL FOR THE SEWERS SHALL BE A SEPARATE PAY ITEM. IN SECTIONS WHERE UNSTABLE SOILS CONSTITUTE THE TRENCH BOTTOM AND FIRM SUPPORT CANNOT BE ESTABLISHED TO CONSTRUCT THE PIPE BEDDING (603.04 – CLASS B), THE UNSTABLE SOIL SHALL BE UNDERCUT IN DEPTH AS APPROVED BY THE OWNER. THIS UNDERCUT AREA IS TO BE BACKFILLED WITH A COMPACTED NUMBER 4 CRUSHED STONE AGGREGATE, OR OTHER MATERIAL AS APPROVED BY THE OWNER, TO A DEPTH OF SIX INCHES BELOW THE BOTTOM OF THE PIPE. THE UNIT PRICE BID FOR SUBBEDDING MATERIAL SHALL INCLUDE ALL LABOR, EQUIPMENT, MATERIALS, EXCAVATION AND DISPOSAL OF UNSUITABLE SOILS AT OTHER LOCATIONS ON THE CONSTRUCTION SITE AND INCIDENTALS TO COMPLETE THIS WORK. THE USE AND DIRECTION OF THE OWNER FOR THIS ITEM DOES NOT REMOVE THE CONTRACTOR'S RESPONSIBILITY FOR THE SAFETY OF HIS LABOR FORCE OR THE INTEGRITY OF SUCH CONDUIT INSTALLATION FOR MEETING ALL TESTING AND INSPECTION REQUIREMENTS. CALCULATIONS OF THE NUMBER OF TONS OF THIS ITEM USED SHALL BE MADE FROM LOAD SLIPS SUPPLIED TO THE OWNER

COMPACTED BACKFILL (ALL TRENCHES)

THE ENTIRE TRENCH BACKFILL SHALL BE COMPACTED IN LAYERS NOT TO EXCEED 8 INCHES IN THICKNESS WITH MECHANICAL TAMPERS MEETING 98 PERCENT OF MAXIMUM LABORATORY DRY WEIGHT USING PREMIUM GRANULAR BACKFILL ODOT ITEM 304 OR SUITABLE ON–SITE MATERIAL PREMIUM BACKFILL SHALL BE INSTALLED UNDER ALL PAVED AREAS. NO SLAG ALLOWED.

LINE AND GRADE CONTROL

THE LINE AND GRADE OF SEWER MAINS SHALL BE CONTROLLED DURING THE SEWER CONSTRUCTION BY USE OF AN APPROVED LASER DEVICE. THE LINE AND GRADE OF THE LASER SHALL BE "CHECKED" FROM LINE AND GRADE STAKES AS DEEMED NECESSARY BY THE CONTRACTOR.

CONCRETE ENCASEMENT

AT ALL STORM SEWER MAIN AND SANITARY SEWER MAIN INTERSECTIONS (CROSSINGS) WHEN PIPE CLEARANCE IS LESS THAN 18", THE LOWER PIPE SHALL BE ENCASED AND THE UPPER PIPE SHALL BE MONOLITHICALLY CRADLED IN 2500 PSI CONCRETE FOR THE WIDTH OF THE TRENCH. AT PIPE CROSSINGS GREATER THAN 18" THE BACKFILL BELOW THE UPPER PIPE SHALL BE COMPACTED IN PLACE TO THE SATISFACTION OF THE OWNER. THE COST OF CONCRETE ENCASEMENT, CRADLING, AND COMPACTED BACKFILL SHALL BE INCLUDED IN THE UNIT PRICE BID FOR THE VARIOUS SEWER CONDUITS.

STORM SEWER

STORM CONDUIT

ALL STORM SEWER CONDUIT SHALL CONFORM TO THE FOLLOWING ALTERNATE REQUIREMENTS:

1. (I) REINFORCED CONCRETE PIPE, ASTM C–76, "B" OR "C" WALL, 8 FOOT LENGTHS, WITH A RESILIENT GASKET JOINT CONFORMING TO ASTM C–443:
   (A) 12" & 15" DIA. CLASS IV
   (B) 18" – 24" DIA. CLASS III
2. POLYVINYL CHLORIDE (PVC) ASTM D–3034 (SDR 35) WITH GASKET MATERIAL CONFORMING TO ASTM F–477 AND JOINTS PER ASTM D–3212 OR SOLVENT CEMENT JOINTS PER ASTM D–2564.
3. OTHER OPTIONAL MATERIALS MAY BE USED ONLY AS APPROVED BY THE OWNER. THE TYPE OF MATERIALS TO BE USED IN ALL CASES SHALL FIRST BE APPROVED BY THE OWNER.

VCR TELEVISION INSPECTION AND TESTING OF STORM SEWERS

ALL INSPECTION AND TESTING SHALL BE DONE BY AN EXPERIENCED AND QUALIFIED FIRM ENGAGED IN THIS TYPE OF WORK, INDEPENDENT FROM THE CONTRACTOR, AS APPROVED BY THE OWNER. WRITTEN REPORTS FOR ALL INSPECTION AND TESTING SHALL BE SUBMITTED TO THE OWNER AND THE GOVERNING AUTHORITY FOR APPROVAL. ALL STORM SEWERS MUST BE CLEANED, ALL FOREIGN MATERIAL REMOVED BEFORE INSPECTION AND AGAIN JUST PRIOR TO FINAL ACCEPTANCE AND HAVE VCR TELEVISION INSPECTION. IN THE INSTALLATION FAILS TO MEET THE REQUIREMENTS OF THESE TESTS AND INSPECTIONS, THE CONTRACTOR SHALL REPAIR OR REPLACE ALL DEFECTS AND RETEST THE INSTALLATION.

WYE BRANCHES, RISER AND CONNECTIONS

THE MATERIAL FOR ALL WYE BRANCHES, RISERS, AND CONNECTIONS SHALL CONFORM TO THE FOLLOWING REQUIREMENTS:

1. POLYVINYL CHLORIDE (PVC) ASTM D–3034 (SDR 35) WITH GASKET MATERIAL CONFORMING TO ASTM F–477 AND JOINTS PER ASTM D–3212. APPROPRIATE WYE BRANCHES, BOOTS OR SADDLES SHALL BE INSTALLED IN CORED HOLES IN THE STORM SEWER CONDUIT.

SANITARY SEWERS

CLEAN WATER CONNECTIONS PROHIBITED

ROOF DRAINS, FOUNDATION DRAINS, AND OTHER CLEAN WATER CONNECTIONS TO THE SANITARY SEWER SYSTEM ARE PROHIBITED.

SEWERS SHALL BE LAID AT LEAST 10 FEET HORIZONTALLY FROM ANY EXISTING OR PROPOSED WATER MAIN. SEWERS CROSSING WATER MAINS SHALL BE LAID TO PROVIDE A MINIMUM VERTICAL DISTANCE OF 18 INCHES BETWEEN THE OUTSIDE OF THE WATER MAIN AND THE OUTSIDE OF THE SEWER.

WYE BRANCHES, RISER AND CONNECTIONS (6" DIAMETER)

THE MATERIAL FOR ALL WYE BRANCHES, RISERS, AND CONNECTIONS SHALL CONFORM TO THE FOLLOWING REQUIREMENTS:

1. POLYVINYL CHLORIDE (PVC) ASTM D–3034 (SDR 35) WITH GASKET MATERIAL CONFORMING TO ASTM F–477 AND JOINTS PER ASTM D–3212. WYE BRANCHES SHALL BE PREFORMED WYES:

AFTER THE WYE BRANCH, RISER, AND CONNECTION HAVE BEEN INSTALLED, THE END OF THE CONNECTION SHALL BE SEALED WITH AN AIR TIGHT SPIGOT CAP OR AIR TIGHT PLUG AND THE CAP OR PLUG SHALL BE PAINTED YELLOW. THE END OF THE SANITARY CONNECTION SHALL BE MARKED WITH A 2" X 2" HARDWOOD STAKE, EXTENDING VERTICALLY FROM THE END OF THE CONNECTION TO A POINT APPROXIMATELY THREE FEET ABOVE THE SURFACE OF THE GROUND.

WATER WORK

GENERAL

ALL WATER WORK SHALL BE IN ACCORDANCE WITH THE STANDARD CONSTRUCTION AND MATERIAL SPECIFICATIONS OF THE CITY OF CLEVELAND, DEPARTMENT OF PUBLIC UTILITIES, DIVISION OF WATER, 1201 LAKESIDE AVENUE, CLEVELAND, OHIO 44114. ALL PERMITS AND FEES ASSOCIATED WITH THE VARIOUS WATER WORK ITEMS SHALL BE INCLUDED IN THE UNIT PRICE FOR THE VARIOUS WATER WORK ITEMS AND SHALL BE THE RESPONSIBILITY OF THE CONTRACTOR.

HYDRANT

ALL HYDRANTS SHALL BE KENNEDY "MATHEWS" TYPE, MUELLER "ALBERTVILLE" TYPE, OR AMERICAN "TRAFFIC MODEL" TYPE AS PER THE CITY OF CLEVELAND'S STANDARDS. HYDRANTS SHALL BE SUPPLIED WITH ONE STEAMER NOZZLE, TWO HOSE NOZZLES, AND PER THE CITY OF PEPPER PIKE STANDARDS. A SIX (6) INCH HYDRANT ASSEMBLY SHALL INCLUDE THE TEE OR REDUCER AS APPLICABLE, VALVE, VALVE BOX, PIPE, AND A STANDARD 6" HYDRANT TO THE PROPER GRADE. THE UNIT PRICE BID FOR EACH HYDRANT SHALL INCLUDE ALL EXCAVATION, BEDDING, BLOCKING, BACKFILL, MATERIAL, LABOR, PIPE OFFSET IF NECESSARY, AND ALL OTHER INCIDENTAL ITEMS TO COMPLETE SUCH WORK. ALL HYDRANTS SHALL BE FACTORY PAINTED MEETING LOCAL JURISDICTION REQUIREMENTS.

WATER MAIN

ALL WATER MAIN TRENCH UNDER EXISTING OR PROPOSED PAVEMENTS SHALL BE BACKFILLED AS PER THE PLAN DETAILS. ALL WATER MAIN PIPE SHALL BE ASA CLASS 52 CEMENT LINED DUCTILE IRON PIPE WITH A RUBBER RING GASKET, COMPRESSION TYPE JOINT UNLESS OTHERWISE NOTED. THE UNIT PRICE FOR WATER MAIN SHALL INCLUDE ALL EXCAVATION, BEDDING, BLOCKING, TRENCH BACKFILL MATERIALS, COMPACTION AS REQUIRED, LABOR, PIPE AND ALL OTHER INCIDENTAL ITEMS NECESSARY TO COMPLETE SUCH WORK.

WATER CONNECTIONS

CONNECTION MATERIAL SHALL CONFORM TO THE CONSTRUCTION AND MATERIALS SPECIFICATIONS OF THE CITY OF CLEVELAND, DIVISION OF WATER.
ALL SERVICE PIPE WITH A NOMINAL DIAMETER OF TWO INCHES AND LESS SHALL BE TYPE "K" COPPER.

ALL SERVICE PIPE WITH A NOMINAL DIAMETER GREATER THAN TWO INCHES SHALL BE MINIMUM CLASS 52 CEMENT LINED DUCTILE IRON PIPE. OR APPROVED MATERIAL ALTERNATES.

CLEVELAND DIVISION OF WATER NOTES FOR NEW WATER MAIN INSTALLATION (IF APPLICABLE)

1. ALL WATER WORK REQUIRED, WHETHER SHOWN ON THE PLANS OR AS DIRECTED BY THE CLEVELAND DIVISION OF WATER, SHALL BE AT THE EXPENSE OF THE PROJECT.
2. THE INFORMATION SHOWN ON THE CLEVELAND DIVISION OF WATER'S SUMMARY OF WORK/CHARGE LETTER AND STRIP MAPS ARE TAKEN FROM EXISTING AVAILABLE RECORDS, AND THEIR ACCURACY IS NOT GUARANTEED.
3. CALL THE INSPECTION AND ENFORCEMENT UNIT AT 216–664–2342 TO SCHEDULE A PRECONSTRUCTION MEETING. THE OPERATION OF ANY VALVE OR ALTERATION OF ANY PART OF THE WATER SYSTEM BY CONTRACTORS OR THEIR EMPLOYEES IS PROHIBITED WITHOUT THE SUPERVISION OF THE CLEVELAND DIVISION OF WATER INSPECTOR.
4. (N/A)
5. (N/A)
6. (N/A)
7. USE BACKFILL MATERIAL AS SPECIFIED AND COMPACT SUFFICIENTLY IN THOSE AREAS WHERE EXISTING MAINS AND WATER SERVICE CONNECTIONS ARE EXPOSED. (SEE DIVISION OF WATER STANDARD DETAIL STD–001).
8. ALL WATER MAINS AND APPURTENANCES THEREOF SHALL CONFORM WITH THE LATEST MATERIAL SPECIFICATIONS AND SHALL BE INSTALLED IN ACCORDANCE WITH THE CONSTRUCTION AND STANDARD DETAILS OF THE CITY OF CLEVELAND, DIVISION OF WATER.
9. THE CONTRACTOR SHALL BE RESPONSIBLE FOR ANY DAMAGE TO EXISTING WATER MAINS AND APPURTENANCES THEREOF WHEN CONNECTING THE NEW WATER MAIN FOR THE HYDROSTATIC TEST. ALL REPAIRS TO DAMAGED EXISTING FACILITIES SHALL BE MADE BY THE CONTRACTOR, AT THE CONTRACTOR'S EXPENSE, TO THE SATISFACTION OF THE DIVISION OF WATER. (REFER TO THE ALTERNATE TEST DETAIL STD–002 AS NEEDED).
10. ALL HYDROSTATIC PRESSURE TESTING SHALL BE DONE BY THE CONTRACTOR IN THE PRESENCE OF THE DIVISION OF WATER'S INSPECTOR AND/OR OWNER. THE HYDROSTATIC TEST PRESSURE SHALL BE 75 PSI ABOVE THE STATIC PRESSURE PREVAILING AT THE SITE, BUT IN NO CASE LESS THAN 150 PSI. THE PRESSURE TEST SHALL BE FOR A DURATION OF TWO (2) HOURS WITH THE PRESSURE BEING MAINTAINED WITHIN 5 PSI OF THE REQUIRED TEST PRESSURE. SHOULD THE PRESSURE TEST FAIL THE CONTRACTOR SHALL FIND AND CORRECT THE DEFICIENCY(IES) TO THE SATISFACTION OF THE DIVISION OF WATER AND/OR OWNER AND REPEAT THE TWO (2) HOUR PRESSURE TEST.

11A. ALL PIPE, UNLESS OTHERWISE CALLED FOR, SHALL BE DUCTILE IRON, MINIMUM CLASS 52, CEMENT LINED HAVING PUSH–ON JOINTS WITH RADIALLY COMPRESSED RUBBER RING GASKET.

11B. ALL FITTINGS, UNLESS OTHERWISE CALLED FOR, SHALL BE APPROVED DUCTILE IRON CLASS 350, CEMENT LINED OR FUSION BONDED BY EPOXY COATED. ALL FITTINGS AND PIPE CONNECTED TO FITTINGS SHALL BE RESTRAINED USING A "RETAINED" MECHANICAL JOINT CONFORMING TO THE MATERIAL AND PERFORMANCE REQUIREMENTS OF ANSI/AWWA C–110/A21.10 AND ANSI/AWWA C–111/A21.11, OR "COMPACT" FITTINGS IN ACCORDANCE WITH ANSI/AWWA C–153/A21.53. EXCEPT FOR ANCHOR TEES, REDUCERS OR OTHER SPECIAL CIRCUMSTANCES WHEN DIRECTED BY CLEVELAND DIVISION OF WATER, ALL FITTINGS ARE TO HAVE BELL ENDS.

11C. ALL BOLTS AND NUTS ON ALL "RETAINED" MECHANICAL JOINTS SHALL HAVE FIELD APPLIED ONE (1) COAT OF BITUMASTIC PAINTING FOLLOWED BY AN ENCASEMENT OF POLYETHYLENE WRAPPING IN ACCORDANCE WITH ANSI/AWWA C–105/A21.5–88, CLASS "C", METHOD "B".

11D. WHERE SHOWN ON THE PLANS, OR WHEN OTHERWISE CALLED FOR, PIPE AND FITTINGS SHALL HAVE AN APPROVED "TYPE I" OR "

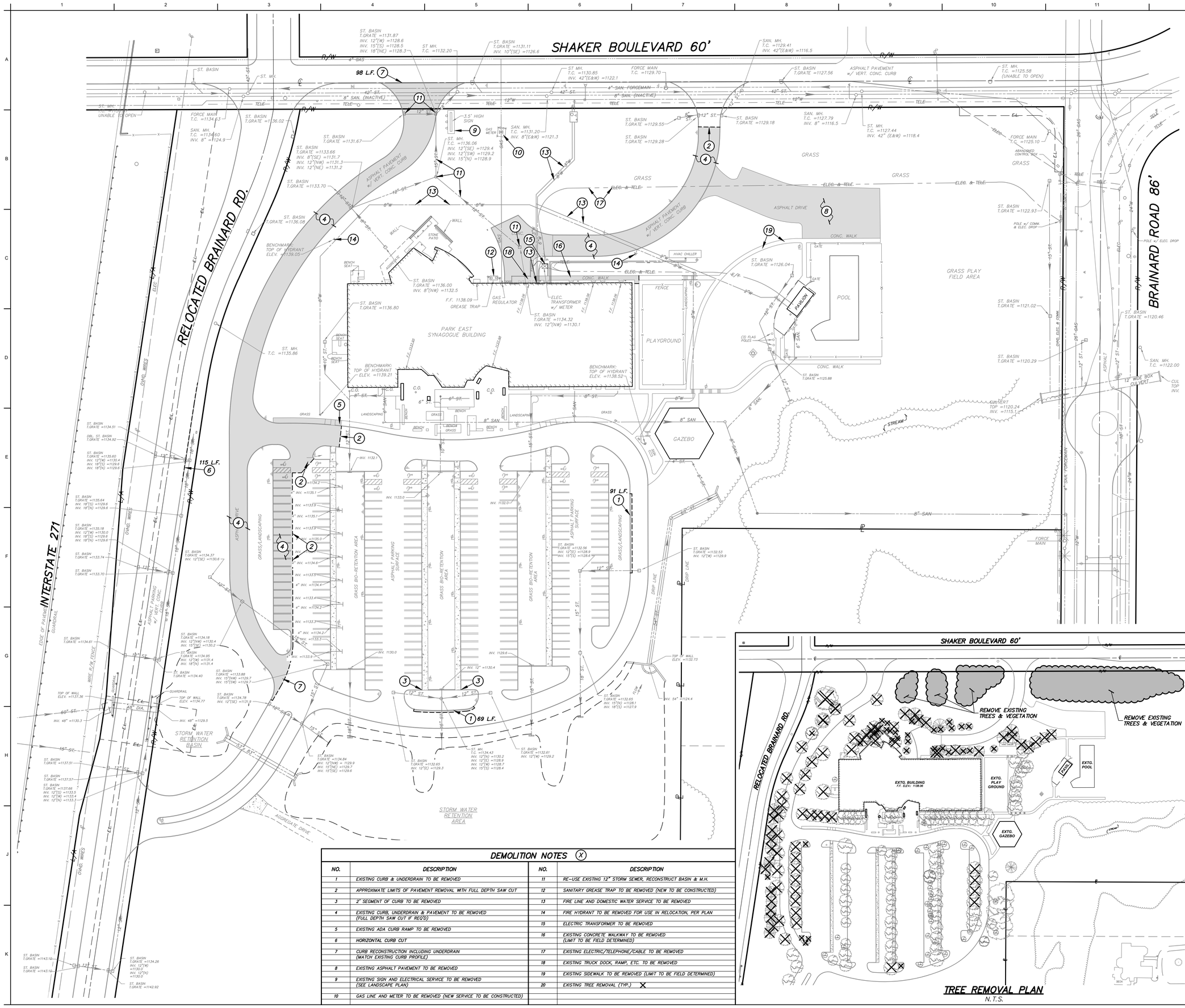

DEMOLITION NOTES (X)

NO.	DESCRIPTION	NO.	DESCRIPTION
1	EXISTING CURB & UNDERDRAIN TO BE REMOVED	11	RE-USE EXISTING 12" STORM SEWER, RECONSTRUCT BASIN & M.H.
2	APPROXIMATE LIMITS OF PAVEMENT REMOVAL WITH FULL DEPTH SAW CUT	12	SANITARY GREASE TRAP TO BE REMOVED (NEW TO BE CONSTRUCTED)
3	2' SEGMENT OF CURB TO BE REMOVED	13	FIRE LINE AND DOMESTIC WATER SERVICE TO BE REMOVED
4	EXISTING CURB, UNDERDRAIN & PAVEMENT TO BE REMOVED (FULL DEPTH SAW CUT IF REQ'D)	14	FIRE HYDRANT TO BE REMOVED FOR USE IN RELOCATION, PER PLAN
		15	ELECTRIC TRANSFORMER TO BE REMOVED
5	EXISTING ADA CURB RAMP TO BE REMOVED	16	EXISTING CONCRETE WALKWAY TO BE REMOVED (LIMIT TO BE FIELD DETERMINED)
6	HORIZONTAL CURB CUT		
7	CURB RECONSTRUCTION INCLUDING UNDERDRAIN (MATCH EXISTING CURB PROFILE)	17	EXISTING ELECTRIC/TELEPHONE/CABLE TO BE REMOVED
		18	EXISTING TRUCK DOCK, RAMP, ETC. TO BE REMOVED
8	EXISTING ASPHALT PAVEMENT TO BE REMOVED	19	EXISTING SIDEWALK TO BE REMOVED (LIMIT TO BE FIELD DETERMINED)
9	EXISTING SIGN AND ELECTRICAL SERVICE TO BE REMOVED (SEE LANDSCAPE PLAN)	20	EXISTING TREE REMOVAL (TYP.) X
10	GAS LINE AND METER TO BE REMOVED (NEW SERVICE TO BE CONSTRUCTED)		

Code Consultant
PHILIP R. SHERMAN, P.E.
P.O. BOX 216
ELKINS, NH 03233-0216
603-526-6190

Kitchen Consultant
RICCA DESIGN STUDIOS
515 WASHINGTON STREET
NORWELL, MA 02061
303-621-6327

Landscape Architect
STEPHEN STIMSON ASSOCIATES
15 DEPOT AVENUE
FALMOUTH, MA 02540
508-548-8119

Civil Engineer
DONALD G. BOHNING & ASSOCIATES
7979 PUB PARKWAY
VALLEY VIEW, OH 44125
216-642-1130

Mechanical, Electrical, & Plumbing Engineer
KARPINSKI ENGINEERING
3135 EUCLID AVENUE
CLEVELAND, OH 44115
216-391-3700

Structural Engineer
GILSANZ MURRAY STEFICEK, LLP
129 WEST 27TH STREET
NEW YORK, NY 10001
212-254-0030

CENTERBROOK
Architects and Planners, LLP
67 Main Street
Post Office Box 955
Centerbrook, Connecticut 06409-0955
Telephone 860.767.0175
Facsimile 860.767.8719

STATE OF OHIO — EDWARD J. WISE — E-61631 — REGISTERED PROFESSIONAL ENGINEER

THE PARK SYNAGOGUE 27500 SHAKER BOULEVARD PEPPER PIKE, OHIO 44124

ISSUED:

No	Name	Date

PHASE: SITE DEVELOPMENT PLAN APPROVAL

DRAWING NAME: DEMOLITION PLAN

JOB #: 1721 (DGB#3406-8)

© 2020 CENTERBROOK ARCHITECTS AND PLANNERS

DRAWN BY: T.M. | DATE: 06/30/2021
CHECKED BY: EK | SCALE: AS NOTED

SHEET: C3.00

M:\Jobfiles\Up\3500-3499\3406-8\dwg\3406DEM C3.0.dwg 6/30/2021 - 1:16pm

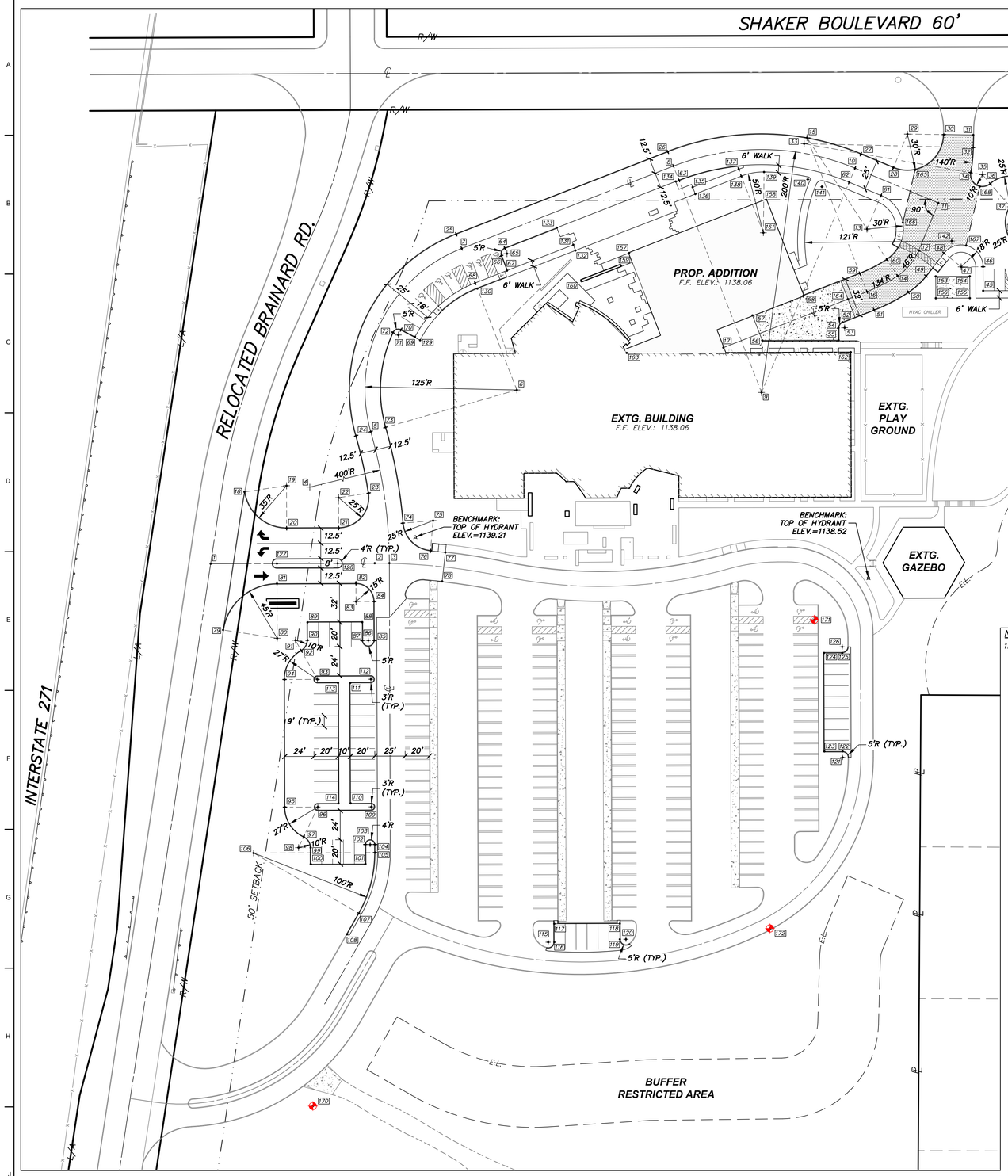

N

GRAPHIC SCALE
0 20' 40'

NOTES:

1. ALL PAVEMENT WIDTHS ARE TO THE FACE OF CURB

COORDINATES:

NO.	DESCRIPTION	NORTHING	EASTING
1	CL-CL	14529.3608	8962.3886
2	P.C. TO EXTG. CL	14529.8003	9097.3848
3	P.C.	14529.8395	9109.4371
4	400' RAD. PT.	14528.5372	8709.4393
5	P.R.C.	14638.1031	9094.1409
6	125' RAD. PT.	14672.3424	9214.3601
7	P.T.	14788.8309	9169.0232
8	P.C.	14856.6239	9343.2104
9	200' RAD. PT.	14670.2424	9415.7494
10	P.T.	14854.8484	9492.6949
11	ANGLE PT.	14826.2331	9561.3481
12	P.C.	14787.0044	9544.9971
13	46' & 30' RAD. PT.	14804.7018	9502.5377
14	P.C.C.	14766.2408	9527.7717
15	134' RAD. PT.	14879.9516	9453.1671
16	P.T.	14753.2122	9502.4936
17	CL @ BLDG. FACE	14707.2205	9384.3229
18	PT. OF NON-TANGENT CURVE	14588.4517	8990.2173
19	35' RAD. PT.	14593.5644	9024.8418
20	P.T.	14558.5646	9024.9558
21	P.C.	14558.7041	9067.7983
22	25' RAD. PT.	14583.7040	9067.7169
23	P.T.	14587.5086	9092.4257
24	P.R.C.	14634.6792	9082.1189
25	P.T.	14800.4798	9164.4895
26	P.C.	14868.2728	9338.6767
27	P.T.	14866.3863	9497.5039
28	P.C.	14855.2411	9524.2433
29	30' RAD. PT.	14882.9320	9535.7852
30	P.T. - END PVMT. WORK	14882.5248	9565.7824
31	END PVMT. WORK	14882.1960	9590.0012
32	P.C.	14871.8992	9589.7678
33	140' RAD. PT.	14874.9748	9450.8018
34	P.R.C.	14851.2067	9587.7546
35	10' RAD. PT.	14849.5020	9597.6082
36	P.R.C.	14841.9448	9604.1572
37	25' RAD. PT.	14823.0518	9620.5296
38	P.T.	14848.0517	9620.4449
39	ANG. PT.	14848.5872	9778.4077
40	ANG. PT.	14775.0876	9778.6568
41	P.C.	14775.0435	9765.6569
42	5' RAD. PT.	14770.0435	9765.6738
43	P.T.	14770.0266	9760.6739
44	ANG. PT.	14754.5267	9760.7264
45	ANG. PT.	14753.9756	9598.1420
46	P.C.	14773.7584	9598.0749
47	18' RAD. PT.	14773.6974	9580.0750
48	P.T.	14784.8921	9565.9797
49	P.C.	14766.1424	9551.0884
50	P.C.C.	14752.8630	9536.5487
51	P.T.	14738.3016	9508.2967
52	P.C.	14728.1847	9482.3024
53	5' RAD. PT.	14723.5252	9484.1159
54	P.T.	14723.5082	9479.1159
55	ANG. PT.	14713.4078	9479.1501
56	ANG. PT.	14713.1948	9416.3359
57	ANG. PT. - BLDG. WALL & PVMT.	14733.7373	9408.3408
58	S.E. BLDG. CORNER	14750.0321	9450.2085

COORDINATES:

NO.	DESCRIPTION	NORTHING	EASTING
59	P.C.	14768.1227	9496.6905
60	P.C.C.	14779.6185	9518.9946
61	P.T.	14832.3927	9514.0796
62	P.C.	14843.3105	9487.8858
63	P.T.	14844.9751	9347.7441
64	P.C.	14789.1908	9204.4122
65	5' RAD. PT.	14784.5313	9206.2256
66	P.T.	14782.7223	9201.5644
67	ANG. PT.	14770.5843	9206.2751
68	P.C.	14760.4077	9180.0854
69	PT. OF NON-TANGENT CURVE	14716.0544	9130.5776
70	P.C.	14722.0026	9119.1768
71	5' RAD. PT.	14717.5810	9116.8423
72	P.C.C.	14719.6851	9112.3066
73	P.R.C.	14641.5270	9106.1628
74	P.R.C.	14562.7209	9120.5204
75	25' RAD. PT.	14564.7927	9145.4344
76	P.T.	14539.8863	9143.2733
77	END PVMT. WORK	14538.6726	9155.5431
78	END PVMT. WORK	14514.8193	9152.8932
79	PT. OF NON-TANGENT CURVE	14474.8484	8972.6447
80	45' RAD. PT.	14468.0387	9017.1264
81	P.T.	1451.3.0384	9016.9799
82	P.C.	1451.3.2501	9081.9910
83	15' RAD. PT.	14498.2502	9082.0399
84	P.T.	14498.2990	9097.0398
85	P.C.	14466.2992	9097.1440
86	5' RAD. PT.	14466.2829	9092.1440
87	P.T.	14466.2666	9087.1440
88	ANG. PT.	14481.2665	9087.0952
89	ANG. PT.	14481.1200	9042.0954
90	P.C.	14466.4466	9042.1432
91	10' RAD. PT.	14466.4140	9032.1432
92	P.R.C.	14457.6930	9037.0365
93	27' & 3' RAD. PT.	14434.1463	9050.2484
94	P.T.	14434.0584	9023.2485
95	P.C.	14329.0590	9023.5904
96	27' & 3' RAD. PT.	14329.1469	9050.5903
97	P.R.C.	14304.7640	9038.9939
98	10' RAD. PT.	14295.7333	9034.6990
99	P.T.	14295.7659	9044.6989
100	ANG. PT.	14282.1276	9044.7433
101	ANG. PT.	14282.2741	9089.7431
102	P.C.	14298.2740	9089.6910
103	4' RAD. PT.	14298.2870	9093.6910
104	P.T.	14298.3001	9097.6909
105	P.C.	14291.6049	9097.7127
106	100' RAD. PT.	14291.2793	8997.7133
107	P.T.	14241.5616	9084.4781
108	END CURB WORK	14224.3836	9074.6349
109	3' RAD. PT.	14329.2901	9094.5900
110	ANG. PT.	14332.2348	9077.5803
111	ANG. PT.	14431.2342	9077.2580
112	3' RAD. PT.	14434.2896	9094.2482
113	ANG. PT.	14431.2017	9067.2581
114	ANG. PT.	14332.2022	9067.5804
115	5' RAD. PT.	14217.8813	9240.1785
116	P.C.	14217.8976	9245.1785

COORDINATES:

NO.	DESCRIPTION	NORTHING	EASTING
117	ANG. PT.	14232.9917	9245.1293
118	ANG. PT.	14233.1675	9299.1290
119	P.C.	14220.2926	9299.1709
120	5' RAD. PT.	14220.3089	9304.1709
121	5' RAD. PT.	14369.9477	9482.4597
122	P.C.	14374.9476	9482.4434
123	ANG. PT.	14374.8988	9467.4435
124	ANG. PT.	14455.8984	9467.1798
125	P.C.	14455.9472	9482.1797
126	5' RAD. PT.	14460.9472	9482.1634
127	4' RAD. PT.	14529.5384	9016.9376
128	4' RAD. PT.	14529.7012	9066.9374
129	BACK OF WALK	1471.3.2977	9134.7805
130	BACK OF WALK	14755.7482	9181.8989
131	FACE OF WALK @ DROP-OFF	14791.8207	9260.7977
132	BACK OF WALK @ DROP OFF	14787.1611	9262.6112
133	BEGIN DROP-OFF ZONE	14805.8753	9247.2812
134	END DROP-OFF ZONE	14843.9563	9345.1263
135	FACE OF WALK @ DROP-OFF	14839.1850	9359.0598
136	BACK OF WALK @ DROP-OFF	14833.5935	9361.2360
137	P.C. FACE OF WALK	14853.9208	9396.9220
138	P.C. BACK OF WALK	14848.3294	9399.0982
139	P.T. BACK OF WALK	14851.7308	9417.7971
140	2' RAD. PT.	14845.6525	9453.8485
141	5' RAD. PT.	14839.6125	9465.4084
142	121' RAD. PT.	14794.9337	9572.2655
143	25' RAD. PT.	14810.1219	9641.2061
144	ANG. PT.	14810.0899	9631.7843
145	ANG. PT.	14810.0583	9622.4669
146	2' RAD. PT.	14826.0658	9624.6293
147	3' RAD. PT.	14795.4511	9624.8120
148	25' RAD. PT.	14810.3738	9715.5368
149	ANG. PT.	14810.4058	9724.9586
150	ANG. PT.	14810.4373	9734.2761
151	2' RAD. PT.	14794.4299	9732.1137
152	3' RAD. PT.	14825.0446	9731.9310
153	N.W. CORN. CONC. PAD	14765.8433	9559.1015
154	N.E. CORN. CONC. PAD	14765.9382	9587.1014
155	S.E. CORN. CONC. PAD	14747.9383	9587.1624
156	S.W. CORN. CONC. PAD	14747.8434	9559.1625
157	N.W. BLDG. CORNER	14785.0229	9306.7483
158	N.E. BLDG. CORNER	14828.9093	9419.5098
159	END PROP. WALL - EAST	14774.8726	9299.9681
160	END PROP. WALL - WEST	14762.1783	9267.3513
161	50' RAD. PT.	14801.7340	9417.2330
162	EXTG. N.E. BLDG. CORN.	14703.4418	9489.1840
163	EXTG. BLDG. CORN.	14702.8165	9304.8182
164	HVY. DUTY ASPH. TO CONC.	14747.1170	9486.8327
165	HVY. DUTY ASPH. TO STD. ASPH.	14853.6053	9542.1053
166	HVY. DUTY ASPH. TO STD. ASPH.	14810.1129	9532.0457
167	HVY. DUTY ASPH. TO STD. ASPH.	14791.2344	9584.1312
168	HVY. DUTY ASPH. TO STD. ASPH.	14839.7592	9595.3548
169	CONST. CONTROL - PIN SET	14748.6679	9825.5401
170	CONST. CONTROL - PIN SET	14083.0301	9046.5477
171	CONST. CONTROL - MAG NAIL SET	14483.2687	9459.2045
172	CONST. CONTROL - MAG NAIL SET	14229.2377	9422.6953

Code Consultant
PHILIP R. SHERMAN, P.E.
P.O. BOX 216
ELKINS, NH 03233-0216
603-526-6190

Kitchen Consultant
RICCA DESIGN STUDIOS
515 WASHINGTON STREET
NORWELL, MA 02061
303-621-6327

Landscape Architect
STEPHEN STIMSON ASSOCIATES
15 DEPOT AVENUE
FALMOUTH, MA 02540
508-548-8119

Civil Engineer
DONALD G. BOHNING & ASSOCIATES
7979 PUB PARKWAY
VALLEY VIEW, OH 44125
216-642-1130

Mechanical, Electrical, & Plumbing Engineer
KARPINSKI ENGINEERING
3135 EUCLID AVENUE
CLEVELAND, OH 44115
216-391-3700

Structural Engineer
GILSANZ MURRAY STEFICEK, LLP
129 WEST 27TH STREET
NEW YORK, NY 10001
212-254-0030

CENTERBROOK
Architects and Planners, LLP
67 Main Street
Post Office Box 955
Centerbrook, Connecticut 06409-0955
Telephone 860.767.0175
Facsimile 860.767.8719

STATE OF OHIO
EDWARD J. WISE
E-61631
REGISTERED
PROFESSIONAL ENGINEER

THE PARK SYNAGOGUE
27500 SHAKER BOULEVARD
PEPPER PIKE, OHIO 44124

ISSUED:

No	Name	Date

PHASE:
SITE DEVELOPMENT PLAN APPROVAL

DRAWING NAME:
GEOMETRIC SITE PLAN

JOB #: 1721 (DGB#3406-8)

© 2021 CENTERBROOK ARCHITECTS AND PLANNERS

DRAWN BY: TM
DATE: 06/30/2021
CHECKED BY: EK
SCALE: AS NOTED

SHEET:
C4.00

M:\Jobsadd\pj\3000-3499\3406-8\dwg\3406808 CK.dwg 6/16/2021 - 11:18am

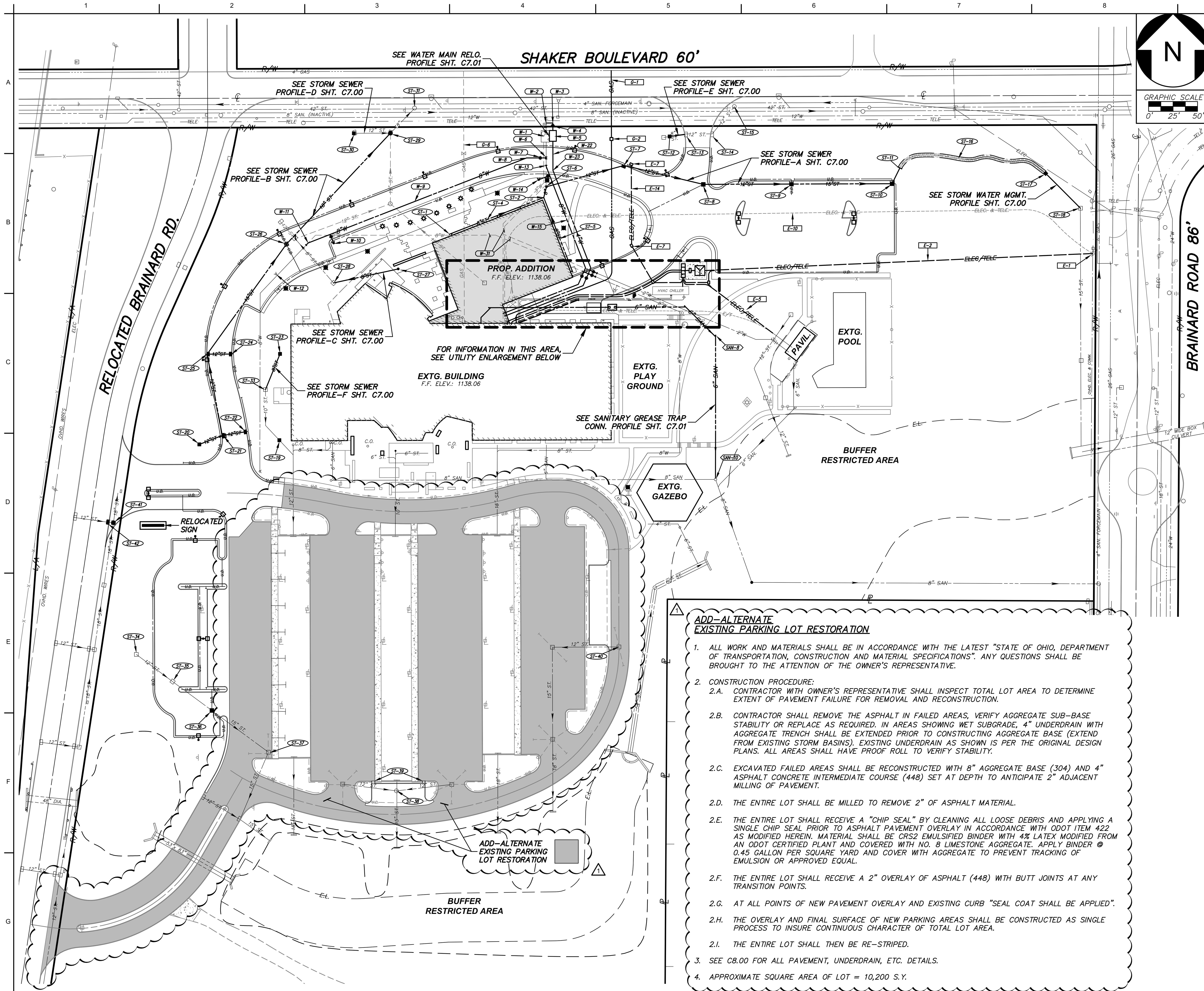

ADD-ALTERNATE EXISTING PARKING LOT RESTORATION

1. ALL WORK AND MATERIALS SHALL BE IN ACCORDANCE WITH THE LATEST "STATE OF OHIO, DEPARTMENT OF TRANSPORTATION, CONSTRUCTION AND MATERIAL SPECIFICATIONS". ANY QUESTIONS SHALL BE BROUGHT TO THE ATTENTION OF THE OWNER'S REPRESENTATIVE.
2. CONSTRUCTION PROCEDURE:
   - 2.A. CONTRACTOR WITH OWNER'S REPRESENTATIVE SHALL INSPECT TOTAL LOT AREA TO DETERMINE EXTENT OF PAVEMENT FAILURE FOR REMOVAL AND RECONSTRUCTION.
   - 2.B. CONTRACTOR SHALL REMOVE THE ASPHALT IN FAILED AREAS, VERIFY AGGREGATE SUB-BASE STABILITY OR REPLACE AS REQUIRED. IN AREAS SHOWING WET SUBGRADE, 4" UNDERDRAIN WITH AGGREGATE TRENCH SHALL BE EXTENDED PRIOR TO CONSTRUCTING AGGREGATE BASE (EXTEND FROM EXISTING STORM BASINS). EXISTING UNDERDRAIN AS SHOWN IS PER THE ORIGINAL DESIGN PLANS. ALL AREAS SHALL HAVE PROOF ROLL TO VERIFY STABILITY.
   - 2.C. EXCAVATED FAILED AREAS SHALL BE RECONSTRUCTED WITH 8" AGGREGATE BASE (304) AND 4" ASPHALT CONCRETE INTERMEDIATE COURSE (448) SET AT DEPTH TO ANTICIPATE 2" ADJACENT MILLING OF PAVEMENT.
   - 2.D. THE ENTIRE LOT SHALL BE MILLED TO REMOVE 2" OF ASPHALT MATERIAL.
   - 2.E. THE ENTIRE LOT SHALL RECEIVE A "CHIP SEAL" BY CLEANING ALL LOOSE DEBRIS AND APPLYING A SINGLE CHIP SEAL PRIOR TO ASPHALT PAVEMENT OVERLAY IN ACCORDANCE WITH ODOT ITEM 422 AS MODIFIED HEREIN. MATERIAL SHALL BE CRS2 EMULSIFIED BINDER WITH 4% LATEX MODIFIED FROM AN ODOT CERTIFIED PLANT AND COVERED WITH NO. 8 LIMESTONE AGGREGATE. APPLY BINDER @ 0.45 GALLON PER SQUARE YARD AND COVER WITH AGGREGATE TO PREVENT TRACKING OF EMULSION OR APPROVED EQUAL.
   - 2.F. THE ENTIRE LOT SHALL RECEIVE A 2" OVERLAY OF ASPHALT (448) WITH BUTT JOINTS AT ANY TRANSITION POINTS.
   - 2.G. AT ALL POINTS OF NEW PAVEMENT OVERLAY AND EXISTING CURB "SEAL COAT SHALL BE APPLIED".
   - 2.H. THE OVERLAY AND FINAL SURFACE OF NEW PARKING AREAS SHALL BE CONSTRUCTED AS SINGLE PROCESS TO INSURE CONTINUOUS CHARACTER OF TOTAL LOT AREA.
   - 2.I. THE ENTIRE LOT SHALL THEN BE RE-STRIPED.
3. SEE C8.00 FOR ALL PAVEMENT, UNDERDRAIN, ETC. DETAILS.
4. APPROXIMATE SQUARE AREA OF LOT = 10,200 S.Y.

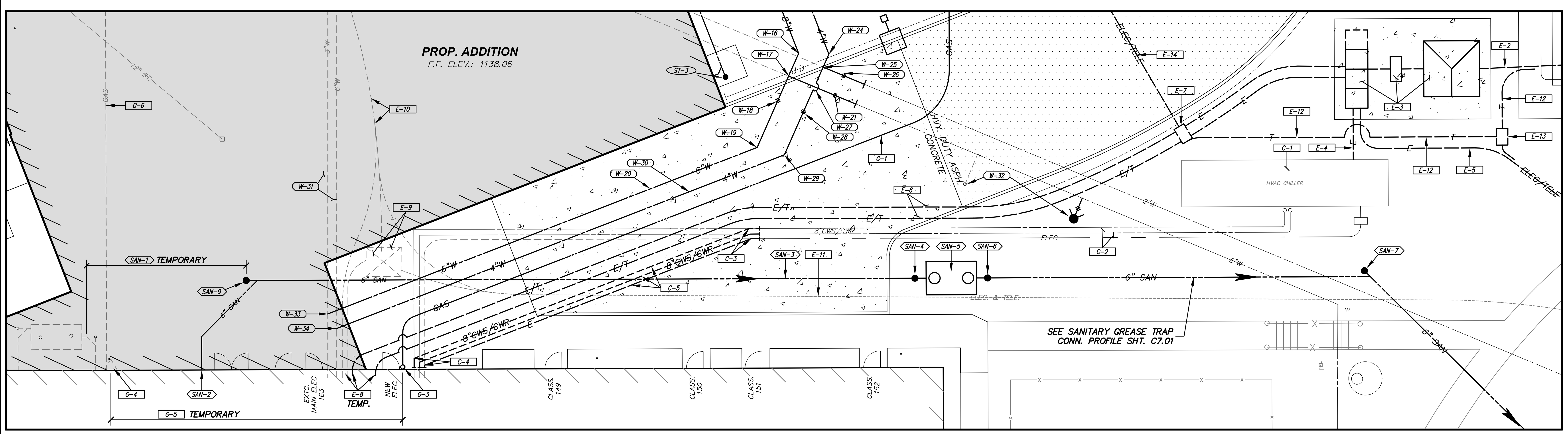

UTILITY ENLARGEMENT
SCALE: 1" = 10'

NO.	TYPE	NORTHING	EASTING
	SANITARY		
SAN-1	DISCONNECT EXTG. GREASE LINE & CONSTRUCT TEMPORARY SANITARY CONN. TO NEW 6" GREASE LINE. CLEAN-OUTS & FITTINGS AS REQ'D. OUTLET INV. ELEV.: 1134.2±		
SAN-2	NEW 6" GREASE LINE, INV. ELEV.: 1133.25± CONFIRM WITH PLUMBING DRAWINGS		
SAN-3	NEW 6" GREASE LINE, SLOPE AS REQ'D. TO MAINTAIN REQ'D. VELOCITY & AVOID CONFLICTS OTHER UTILITIES		
SAN-4	TWO DIRECTION CLEAN-OUT	14719.42	9484.13
SAN-5	1500 GALLON GREASE TRAP, CONFIRM WITH PLUMBING DRAWINGS	14719.45	9490.63
SAN-6	TWO DIRECTION CLEAN-OUT	14719.47	9497.13
SAN-7	6" – 45° BEND & CLEAN-OUT	14719.70	9565.58
SAN-8	6" – 45° BEND & CLEAN-OUT	14689.32	9596.17
SAN-9	6" – 45° BEND & CLEAN-OUT	14719.02	9364.52
SAN-10	CONNECT TO EXISTING SANITARY MANHOLE	14543.66	9596.08
	WATER		
W-1	MAINTAIN EXTG. WATER VAULT FOR 8" FIRE LINE, BACKFLOW & STAND PIPE. REMOVE 3" WATER METER SETTING, ETC..., ADJUST CASTING & STAND PIPE AS REQUIRED.		
W-2	REMOVE EXTG. 8"x3" TEE & INSTALL 8"x4" TEE (OPPOSITE DIRECTION)	14907.56	9423.07
W-3	4"–90° BEND & BLOCKING	14907.59	9429.92
W-4	4" VALVE & BOX	14904.88	9429.93
W-5	INSTALL NEW 4" METER VAULT & METER ASSEMBLY (BACKFLOW IN BUILDING)		
W-6	INSTALL 8"x8"x8" TEE ON EXTG. LINE	14871.90	9423.13
W-7	8" LINE VALVE & BOX	14871.90	9417.02
W-8	8"–22.5° BEND	14871.90	9403.13
W-9	NEW 8" WATER MAIN		
W-10	HYDRANT ASSEMBLY	14784.97	9206.05
W-11	8"–22.5° BEND & CONNECT TO EXTG. 8" WATER MAIN	14785.06	9180.02
W-12	REMOVE EXTG. HYDRANT & RE-USE	14753.28	9147.21
W-13	INSTALL 8"–22.5° BEND ON EXTG. LINE	14863.21	9423.13
W-14	HYDRANT ASSEMBLY	14849.70	9415.50
W-15	NEW 8" WATER MAIN		
W-16	8"–45° BEND	14759.66	9463.32
W-17	8"x6"x8" TEE	14755.61	9461.54
W-18	6" LINE VALVE & BOX	14751.24	9459.61
W-19	6"–45° BEND	14742.83	9455.91
W-20	6" WATER MAIN		
W-21	8" LINE VALVE & BOX, AND CONNECT TO EXTG. 8" WATER MAIN	14752.13	9469.84
W-22	NEW 4" WATER MAIN		
W-23	4"–22.5° BEND	14859.14	9430.08
W-24	4"–45° BEND	14759.53	9468.73
W-25	4"x4"x2" TEE	14757.22	9467.71
W-26	2" LINE VALVE & BOX, AND CONNECT TO EXTG. 2" WATER MAIN	14755.66	9471.40
W-27	DIP 4" WATER MAIN AT 8" CROSSING	14753.68	9466.15
W-28	4" LINE VALVE & BOX	14749.23	9464.19
W-29	4"–45° BEND	14741.51	9460.79
W-30	NEW 4" WATER CONNECTION		
W-31	REMOVE ALL 3", 6", & 8" W.M. AS REQUIRED		
W-32	RELOCATE OR REPLACE EXTG. HYDRANT IN LOCATION SHOWN	14730.05	9512.53
W-33	TEMPORARILY CONNECT NEW 6" W.M. TO EXTG. 6" LINE, TO MAINTAIN SERVICE TO EXTG. BLDG.		
W-34	TEMPORARILY CONNECT NEW 4" W.M. TO EXTG. 3" LINE, TO MAINTAIN SERVICE TO EXTG. BLDG.		

NOTES:

1. EXISTING UNDERGROUND UTILITY LOCATIONS ARE APPROXIMATE AND ARE BASED ON FIELD MARKINGS, RECORD DRAWINGS & LIMITED EXCAVATIONS.
2. CONTRACTOR IS RESPONSIBLE TO REPORT ANY DISCREPANCIES BETWEEN PLANS AND FIELD CONDITIONS TO THE CONSTRUCTION MANAGER & ENGINEER.

NO.	TYPE	NORTHING	EASTING
	ELECTRICAL		
E-1	EXTG. UTILITY POLE WITH TELE. & ELEC. SVC.		
E-2	NEW 4" DUCTS (3 EA.), CONFIRM W/ELEC./TECH. DRAWINGS & UTILITY CO.'s, DUCTING AS REQ'D. FOR CABLE/TELE. PER UTILITY COMPANY		
E-3	NEW TRANSFORMER, METER & SWITCHGEAR		
E-4	NEW ELEC. SVC. TO CHILLER, CONFIRM WITH ELECTRICAL DRAWINGS		
E-5	NEW ELEC. SVC. TO PAVILION/POOL, CONFIRM WITH ELECTRICAL DRAWINGS		
E-6	NEW ELEC. & TELE. DUCTBANK, CONFIRM WITH ELEC./TECH. DRAWINGS		
E-7	NEW 2'x3' QUAZITE HAND-HOLE (ELEC./TELE.), CONFIRM WITH ELEC./TECH. DRAWINGS		
E-8	TEMPORARILY CONNECT NEW ELEC. SVC. TO EXTG. ELEC. SVC. AS REQ'D., UNTIL NEW FACILITIES ARE COMPLETE		
E-9	REMOVE EXTG. TRANSFORMER		
E-10	ABANDON OR REMOVE EXTG. PRIMARY SVC. AS REQ'D. WHEN NEW FACILITIES ARE COMPLETE		
E-11	ABANDON OR REMOVE EXTG. SVC. TO POOL AS REQ'D., WHEN NEW FACILITIES ARE COMPLETE		
E-12	NEW 4" DUCT FOR TELE., CONFIRM WITH ELEC./TECH. DRAWINGS		
E-13	NEW 2'x3' QUAZITE HAND-HOLE (TELE.), CONFIRM WITH ELEC./TECH. DRAWINGS		
E-14	ELEC./TELE. CONDUIT, CONFIRM W/ELEC./TECH.		
	GAS		
G-1	NEW GAS CONNECTION, CONFIRM SPECS. WITH PLUMBING DRAWINGS		
G-2	NEW GAS METER, CONFIRM SPECS. WITH PLUMBING DRAWINGS		
G-3	NEW GAS REGULATOR, CONFIRM SPECS. WITH PLUMBING DRAWINGS		
G-4	EXISTING GAS REGULATOR		
G-5	TEMPORARILY CONNECT NEW GAS SVC. TO EXTG. GAS SERVICE, AS REQ'D., UNTIL NEW FACILITIES ARE COMPLETE		
G-6	ABANDON OR REMOVE EXTG. GAS SVC., AS REQ'D., WHEN NEW FACILITIES ARE COMPLETE		
	CHILLER		
C-1	EXTG. CHILLER TO REMAIN IN SERVICE		
C-2	EXTG. 8" CHILLER LINES (2EA.) & ELEC. CONDUIT		
C-3	8"–22.5° BENDS FOR 8"CWS, 8" CWR & NEW ELEC. CONDUIT AS REQ'D.		
C-4	8"–22.5° & 45° BENDS FOR 8"CWS, 8" CWR & NEW ELEC. CONDUIT AS REQ'D.		
C-5	NEW 8" CHILLER LINES, 8"CWS, 8" CWR & NEW ELEC. CONDUIT AS REQ'D.		
	STORM		
ST-1	8" CLEAN-OUT	14794.01	9324.34
ST-2	8" CLEAN-OUT	14831.50	9420.65
ST-3	8" CLEAN-OUT	14755.43	9450.25
ST-4	100'-8" ST. CONN. @ 1.5% GRADE		
ST-5	110'-8" ST. CONN. @ 1.5% GRADE		
ST-6	YARD BASIN	14842.51	9423.45
ST-7	CATCH BASIN WITH CURB BOX	14864.22	9502.71
ST-8	CATCH BASIN	14844.93	9583.64
ST-9	CATCH BASIN	14845.23	9673.60
ST-10	CATCH BASIN	14845.58	9776.42
ST-11	FULL HEADWALL	14861.72	9784.40
ST-12	YARD BASIN BUILT ON EXISTING STORM (MOVE EXISTING BASIN STRUCTURE)	14893.82	9549.24
ST-13	EXISTING CATCH BASIN	14895.85	9564.42
ST-14	EXISTING CATCH BASIN	14895.96	9591.17
ST-15	EXISTING PUBLIC STORM MANHOLE	14924.34	9615.33
ST-16	WATER QUALITY POND UNDERDRAIN		
ST-17	STORM WATER CONTROL STRUCTURE	14856.11	9933.21
ST-18	EXISTING YARD BASIN	14820.57	9968.79
ST-19	YARD BASIN BUILT ON EXISTING STORM T.C. 1136.75, INV. 10" 1132.8	14583.71	9150.65
ST-20	YARD BASIN	14579.43	9068.89
ST-21	CATCH BASIN WITH CURB BOX	14588.50	9092.27
ST-22	CATCH BASIN WITH CURB BOX	14592.37	9116.97
ST-23	YARD BASIN	14671.81	9151.32
ST-24	CATCH BASIN WITH CURB BOX	14671.68	9101.86
ST-25	CATCH BASIN WITH CURB BOX	14671.54	9076.86
ST-26	CATCH BASIN	14783.83	9157.83
ST-27	YARD BASIN	14758.55	9272.03
ST-28	EXISTING YARD BASIN	14744.25	9205.91
ST-29	EXISTING INLET MANHOLE	14897.20	9264.11
ST-30	EXISTING CATCH BASIN (RECONSTRUCT INTO YARD BASIN)	14897.07	9226.71
ST-31	EXISTING PUBLIC STORM MANHOLE	14922.85	9288.74
ST-32	NOT USED		
ST-33	EXISTING YARD BASIN	14635.42	9136.47
ST-34	EXISTING YARD BASIN	14365.01	9004.53
ST-35	EXISTING CATCH BASIN	14337.26	9041.60
ST-36	CATCH BASIN BUILT ON EXISTING STORM T.C. 1134.50, INV 15" 1130.0	14307.72	9081.71
ST-37	EXISTING CATCH BASIN	14265.18	9139.48
ST-38	EXISTING STORM MANHOLE T.C. 1134.43 RECONSTRUCT TO GRADE T.C. 1134.03	14225.66	9270.24
ST-39	CONSTRUCT DRAINAGE PASS THROUGH (2) 4" THICK, 2' WIDE CONC. & INTEGRAL CURB		
ST-40	EXISTING CATCH BASIN, T.C. 1132.53	14372.66	9497.49
ST-41	RECONSTRUCT MANHOLE TO GRADE	14499.40	8981.14
ST-42	INSTALL NEW CASTING WITH DEPRESSED CURB INLET	14499.84	8976.47

Code Consultant
PHILIP R. SHERMAN, P.E.
P.O. BOX 216
ELKINS, NH 03233-0216
603-526-6190

Kitchen Consultant
RICCA DESIGN STUDIOS
515 WASHINGTON STREET
NORWELL, MA 02061
303-621-6327

Landscape Architect
STEPHEN STIMSON ASSOCIATES
15 DEPOT AVENUE
FALMOUTH, MA 02540
508-548-8119

Civil Engineer
DONALD G. BOHNING & ASSOCIATES
7979 PUB PARKWAY
VALLEY VIEW, OH 44125
216-642-1130

Mechanical, Electrical, & Plumbing Engineer
KARPINSKI ENGINEERING
3135 EUCLID AVENUE
CLEVELAND, OH 44115
216-391-3700

Structural Engineer
GILSANZ MURRAY STEFICEK, LLP
129 WEST 27TH STREET
NEW YORK, NY 10001
212-254-0030

CENTERBROOK
Architects and Planners, LLP
67 Main Street
Post Office Box 955
Centerbrook, Connecticut 06409-0955
Telephone 860.767.0175
Facsimile 860.767.8719

STATE OF OHIO
DONALD M. WISE
E-61631
REGISTERED
PROFESSIONAL ENGINEER

THE PARK SYNAGOGUE
27500 SHAKER BOULEVARD
PEPPER PIKE, OHIO 44124

ISSUED:

No | Name | Date

PHASE:
SITE DEVELOPMENT PLAN APPROVAL

DRAWING NAME:
SITE UTILITY PLAN

JOB #: 1721 (DGB#3406-8)

© 2021 CENTERBROOK ARCHITECTS AND PLANNERS

DRAWN BY: TM | DATE: 06/30/2021
CHECKED BY: EK | SCALE: AS NOTED

SHEET:
C5.00

M:\adcadd\p\3000-3499\3406-8\dwg\340608 C5.0.dwg 6/18/2021 - 1:16pm

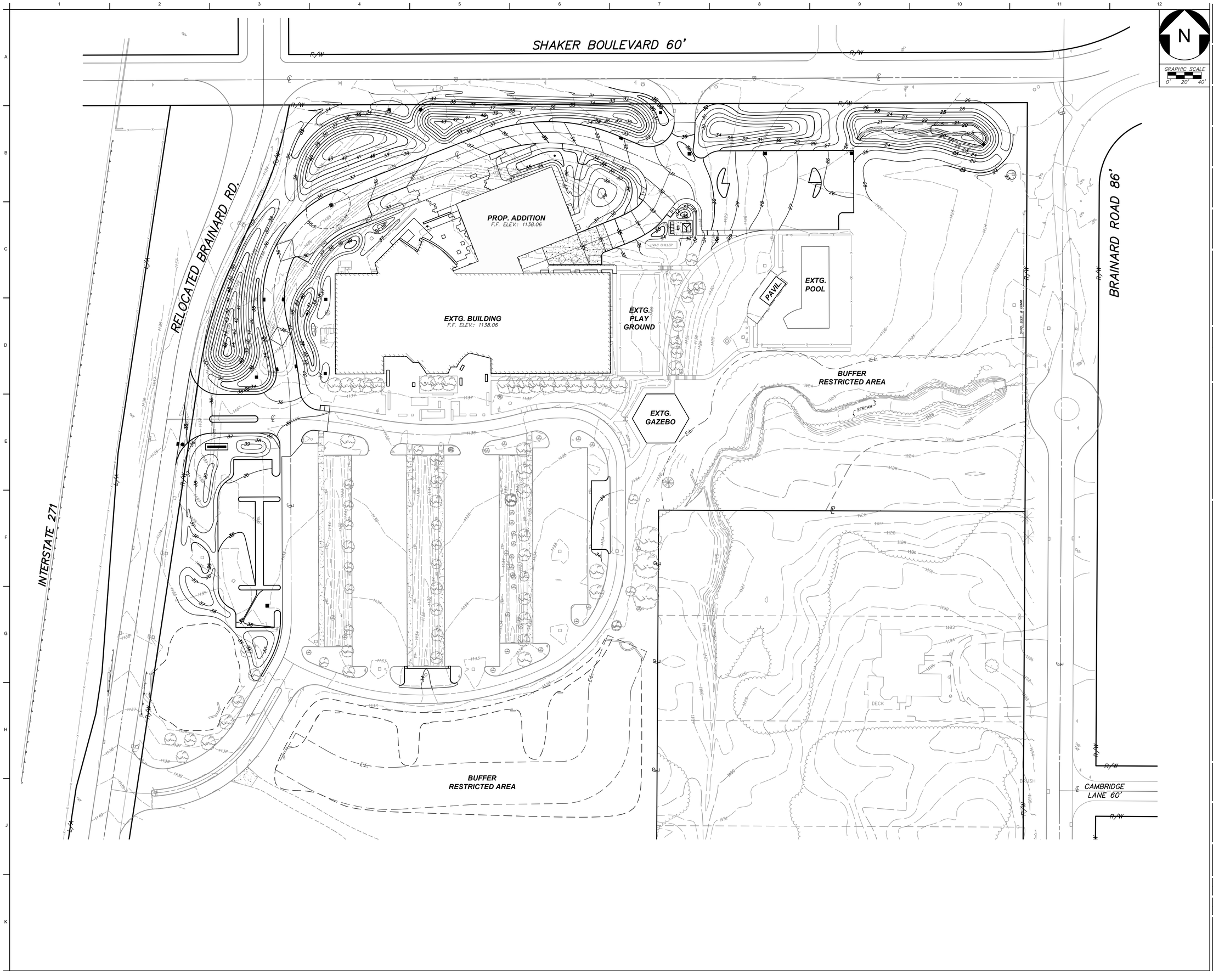

Code Consultant
PHILIP R. SHERMAN, P.E.
P.O. BOX 216
ELKINS, NH 03233-0216
603-526-6190

Kitchen Consultant
RICCA DESIGN STUDIOS
515 WASHINGTON STREET
NORWELL, MA 02061
303-621-6327

Landscape Architect
STEPHEN STIMSON ASSOCIATES
15 DEPOT AVENUE
FALMOUTH, MA 02540
508-548-8119

Civil Engineer
DONALD G. BOHNING & ASSOCIATES
7979 PUB PARKWAY
VALLEY VIEW, OH 44125
216-642-1130

Mechanical, Electrical, & Plumbing Engineer
KARPINSKI ENGINEERING
3135 EUCLID AVENUE
CLEVELAND, OH 44115
216-391-3700

Structural Engineer
GILSANZ MURRAY STEFICEK, LLP
129 WEST 27TH STREET
NEW YORK, NY 10001
212-254-0030

CENTERBROOK
Architects and Planners, LLP
67 Main Street
Post Office Box 955
Centerbrook, Connecticut 06409-0955
Telephone 860.767.0175
Facsimile 860.767.8719

STATE OF OHIO
RONALD M. WISE
E-61631
REGISTERED
PROFESSIONAL ENGINEER
9/30/2021

THE PARK SYNAGOGUE 27500 SHAKER BOULEVARD PEPPER PIKE, OHIO 44124

ISSUED:

No	Name	Date

PHASE:
SITE DEVELOPMENT PLAN APPROVAL

DRAWING NAME:
OVERALL GRADING PLAN

JOB #: 1721 (DGB#3406-8)

© 2021 CENTERBROOK ARCHITECTS AND PLANNERS

DRAWN BY: TM	DATE: 06/30/2021
CHECKED BY: EK	SCALE: AS NOTED

SHEET:
C6.00

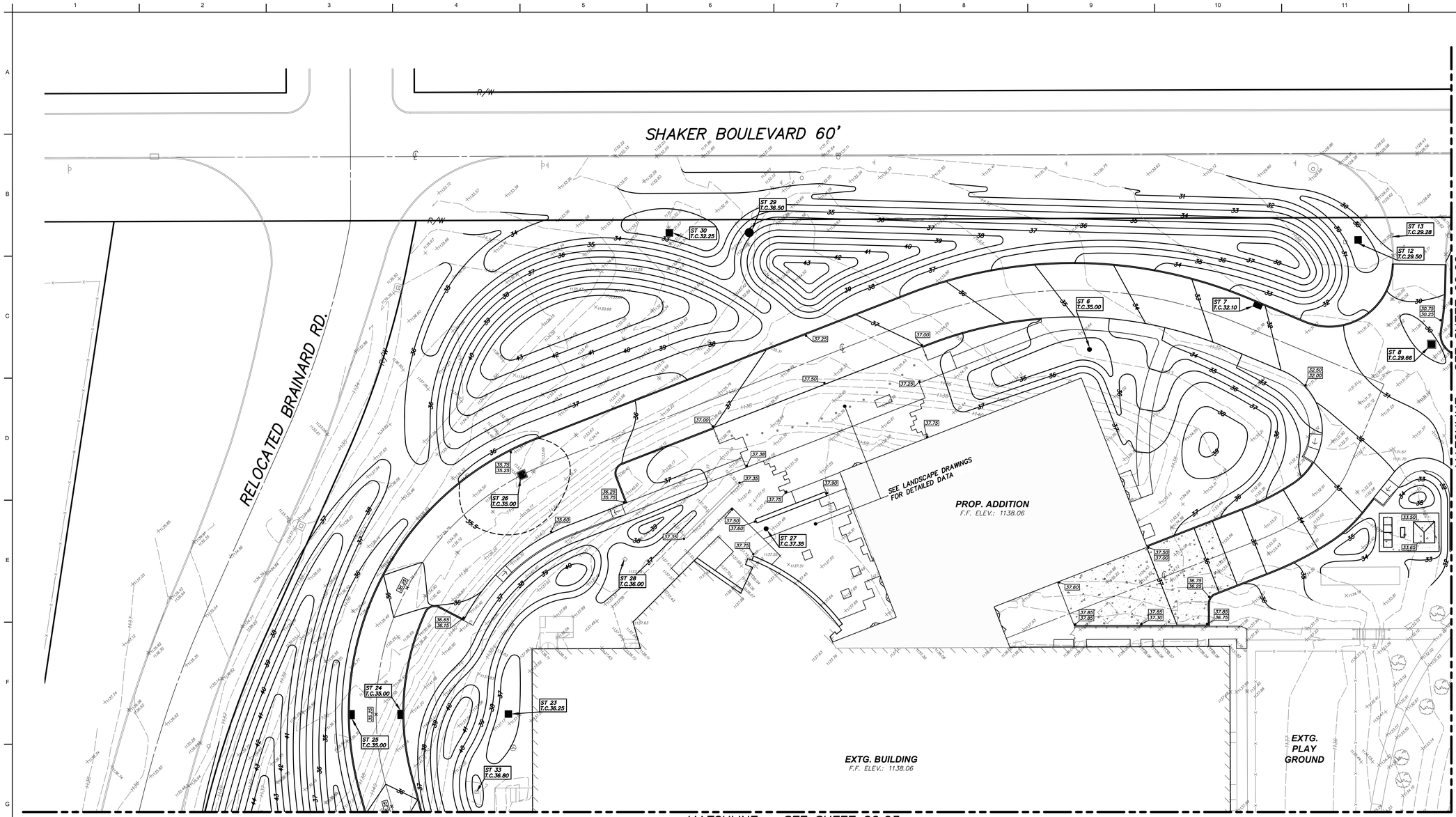

Code Consultant
PHILIP R. SHERMAN, P.E.
P.O. BOX 216
ELKINS, NH 03233-0216
603-526-6190

Kitchen Consultant
RICCA DESIGN STUDIOS
515 WASHINGTON STREET
NORWELL, MA 02061
303-621-6327

Landscape Architect
STEPHEN STIMSON ASSOCIATES
15 DEPOT AVENUE
FALMOUTH, MA 02540
508-548-8119

Civil Engineer
DONALD G. BOHNING & ASSOCIATES
7979 PUB PARKWAY
VALLEY VIEW, OH 44125
216-642-1130

Mechanical, Electrical, & Plumbing Engineer
KARPINSKI ENGINEERING
3135 EUCLID AVENUE
CLEVELAND, OH 44115
216-391-3700

Structural Engineer
GILSANZ MURRAY STEFICEK, LLP
129 WEST 27TH STREET
NEW YORK, NY 10001
212-254-0030

CENTERBROOK
Architects and Planners, LLP
67 Main Street
Post Office Box 955
Centerbrook, Connecticut 06409-0955
Telephone 860.767.0175
Facsimile 860.767.8719

STATE OF OHIO
EDWARD M. WISE
E-61631
REGISTERED
PROFESSIONAL ENGINEER
9/30/2021

THE PARK SYNAGOGUE 27500 SHAKER BOULEVARD PEPPER PIKE, OHIO 44124

ISSUED:

No	Name	Date

PHASE:
SITE DEVELOPMENT PLAN APPROVAL

DRAWING NAME:
GRADING PLAN ENLARGEMENT

JOB #: 1721 (DGB#3406-8)

© 2021 CENTERBROOK ARCHITECTS AND PLANNERS

DRAWN BY: TM	DATE: 06/30/2021
CHECKED BY: EK	SCALE: AS NOTED

SHEET:
C6.01

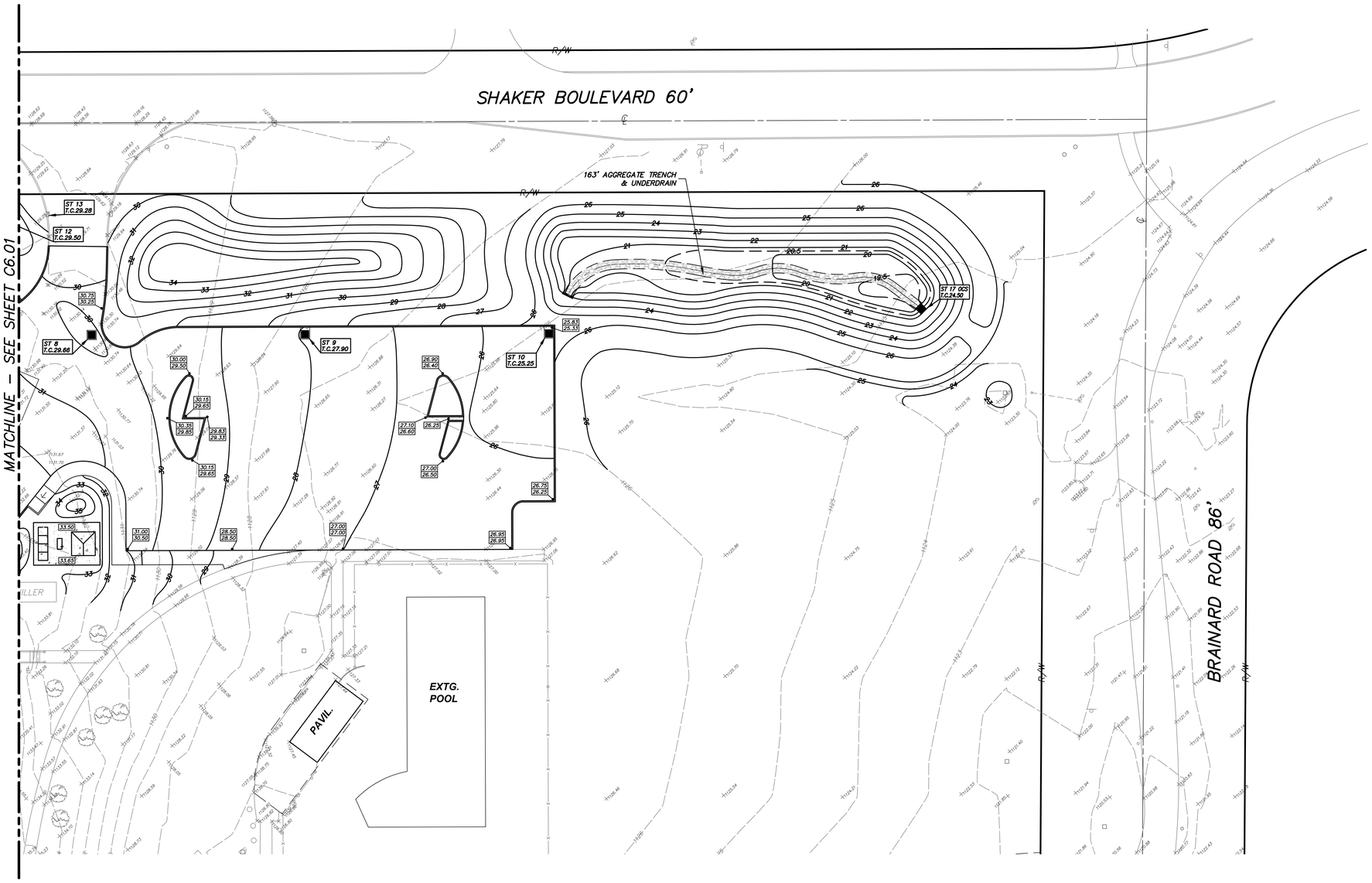

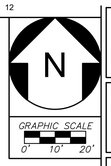

Code Consultant
PHILIP R. SHERMAN, P.E.
P.O. BOX 216
ELKINS, NH 03233-0216
603-526-6190

Kitchen Consultant
RICCA DESIGN STUDIOS
515 WASHINGTON STREET
NORWELL, MA 02061
303-621-6327

Landscape Architect
STEPHEN STIMSON ASSOCIATES
15 DEPOT AVENUE
FALMOUTH, MA 02540
508-548-8119

Civil Engineer
DONALD G. BOHNING & ASSOCIATES
7979 PUB PARKWAY
VALLEY VIEW, OH 44125
216-642-1130

Mechanical, Electrical, & Plumbing Engineer
KARPINSKI ENGINEERING
3135 EUCLID AVENUE
CLEVELAND, OH 44115
216-391-3700

Structural Engineer
GILSANZ MURRAY STEFICEK, LLP
129 WEST 27TH STREET
NEW YORK, NY 10001
212-254-0030

CENTERBROOK
Architects and Planners, LLP
67 Main Street
Post Office Box 955
Centerbrook, Connecticut 06409-0955
Telephone 860.767.0175
Facsimile 860.767.8719

STATE OF OHIO
RONALD M. WISE
E-61631
REGISTERED
PROFESSIONAL ENGINEER
9/30/2021

THE PARK SYNAGOGUE 27500 SHAKER BOULEVARD PEPPER PIKE, OHIO 44124

ISSUED:

No	Name	Date

PHASE:
SITE DEVELOPMENT PLAN APPROVAL

DRAWING NAME:
GRADING PLAN ENLARGEMENT

JOB #: 1721 (DGB#3406-8)

© 2021 CENTERBROOK ARCHITECTS AND PLANNERS

DRAWN BY: TM	DATE: 06/30/2021
CHECKED BY: EK	SCALE: AS NOTED

SHEET:
C6.02

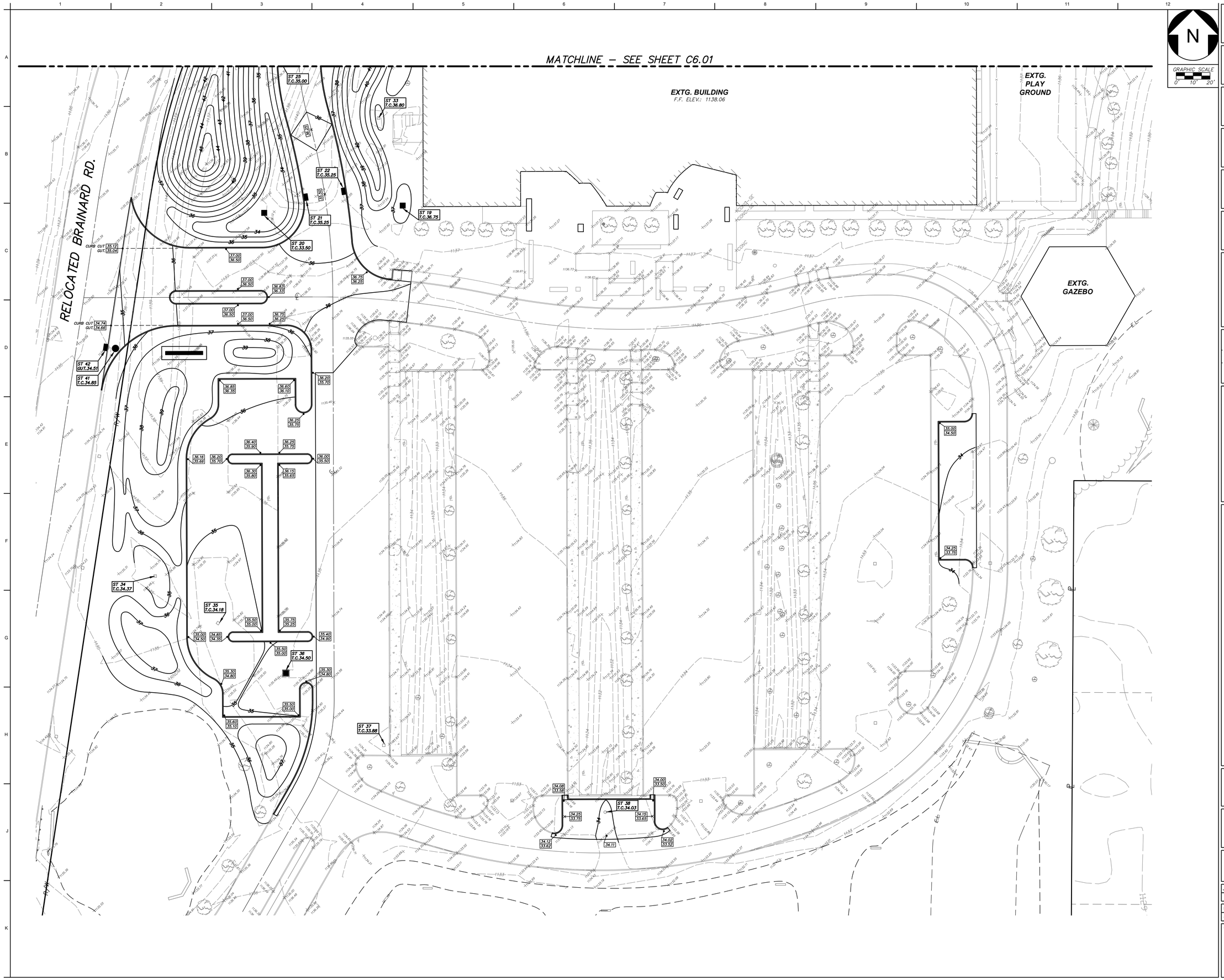

Code Consultant
PHILIP R. SHERMAN, P.E.
P.O. BOX 216
ELKINS, NH 03233-0216
603-526-6190

Kitchen Consultant
RICCA DESIGN STUDIOS
515 WASHINGTON STREET
NORWELL, MA 02061
303-621-6327

Landscape Architect
STEPHEN STIMSON ASSOCIATES
15 DEPOT AVENUE
FALMOUTH, MA 02540
508-548-8119

Civil Engineer
DONALD G. BOHNING & ASSOCIATES
7979 PUB PARKWAY
VALLEY VIEW, OH 44125
216-642-1130

Mechanical, Electrical, & Plumbing Engineer
KARPINSKI ENGINEERING
3135 EUCLID AVENUE
CLEVELAND, OH 44115
216-391-3700

Structural Engineer
GILSANZ MURRAY STEFICEK, LLP
129 WEST 27TH STREET
NEW YORK, NY 10001
212-254-0030

CENTERBROOK
Architects and Planners, LLP
67 Main Street
Post Office Box 955
Centerbrook, Connecticut 06409-0955
Telephone 860.767.0175
Facsimile 860.767.8719

STATE OF OHIO
RICHARD M. WISE
E-61631
REGISTERED
PROFESSIONAL ENGINEER

THE PARK SYNAGOGUE 27500 SHAKER BOULEVARD PEPPER PIKE, OHIO 44124

ISSUED:

No	Name	Date

PHASE:
SITE DEVELOPMENT PLAN APPROVAL

DRAWING NAME:
GRADING PLAN ENLARGEMENT

JOB #: 1721 (DGB#3406-8)
© 2021 CENTERBROOK ARCHITECTS AND PLANNERS

DRAWN BY: TM	DATE: 06/30/2021
CHECKED BY: EK	SCALE: AS NOTED

SHEET:
C6.03

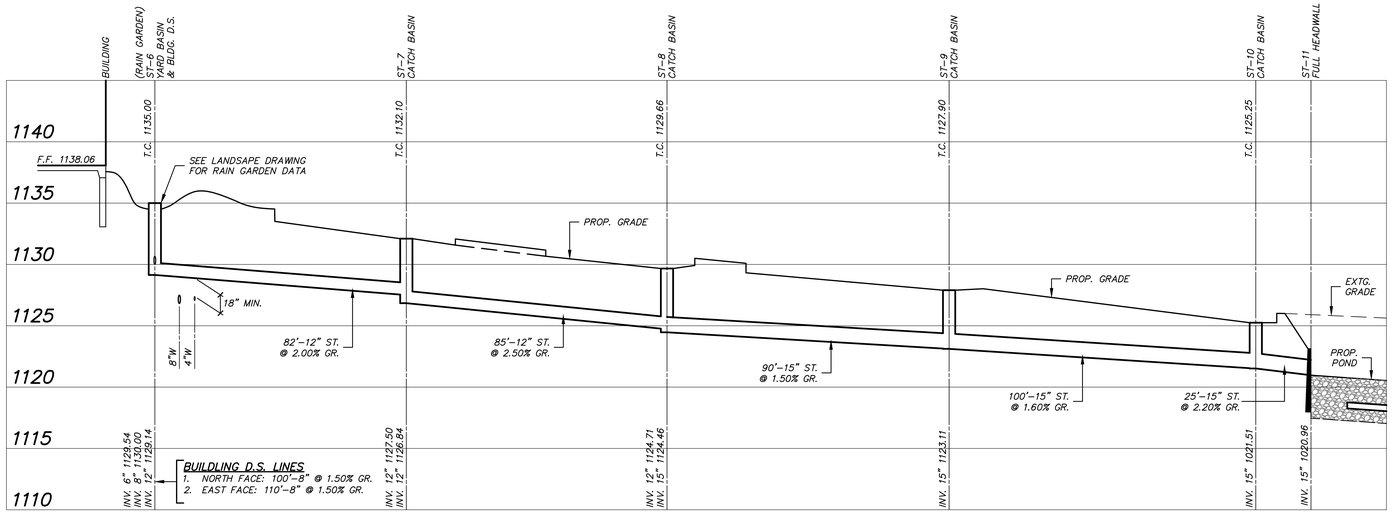

STORM SEWER PROFILE-A

HORIZ. SCALE: 1"=20' VERT. SCALE: 1"=5'

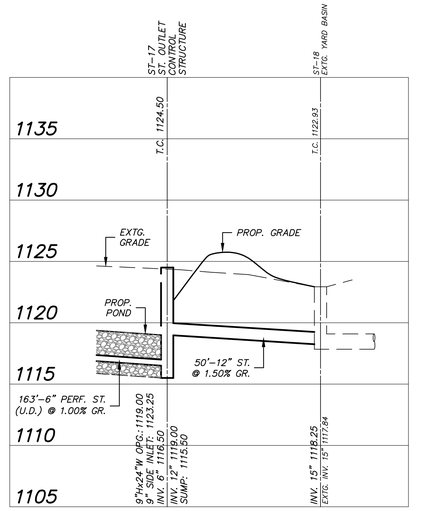

STORMWATER MANAGEMENT OUTLET PROFILE

HORIZ. SCALE: 1"=20' VERT. SCALE: 1"=5'

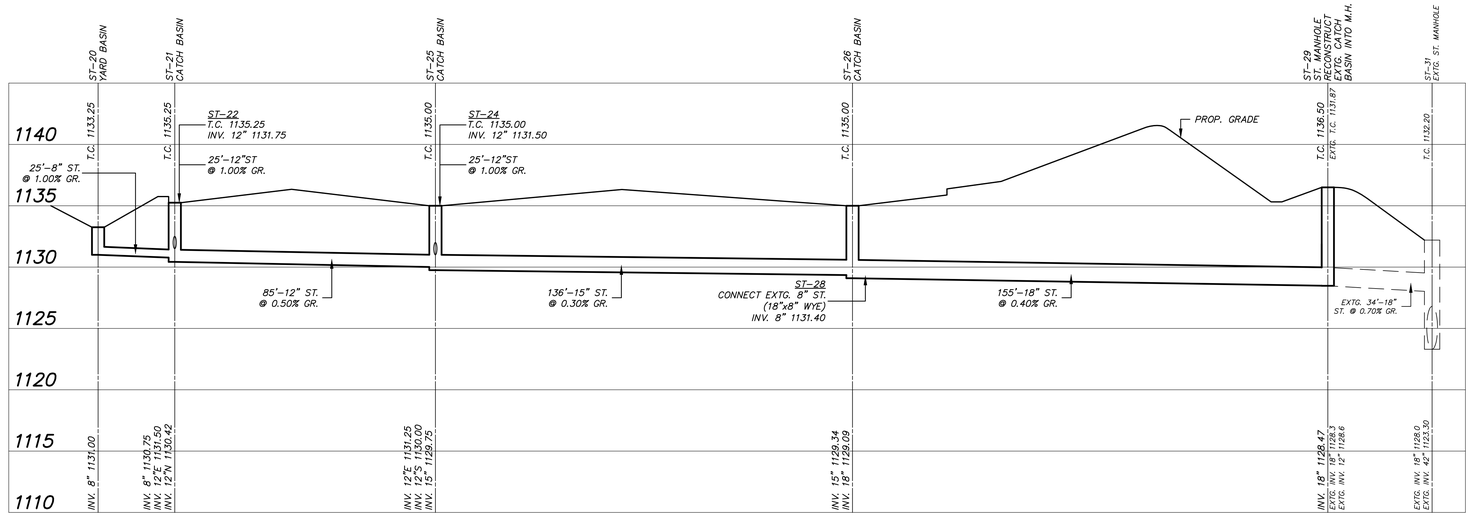

STORM SEWER PROFILE-B

HORIZ. SCALE: 1"=20' VERT. SCALE: 1"=5'

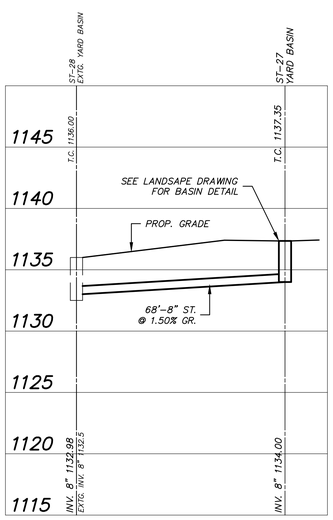

STORM SEWER PROFILE-C

HORIZ. SCALE: 1"=20' VERT. SCALE: 1"=5'

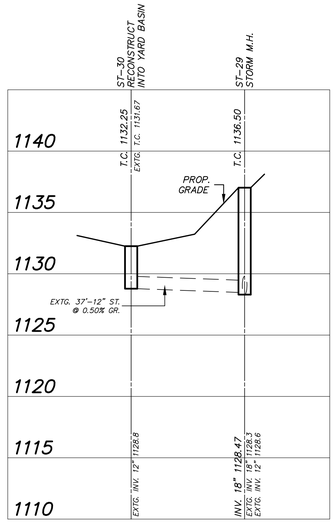

STORM SEWER PROFILE-D

HORIZ. SCALE: 1"=20' VERT. SCALE: 1"=5'

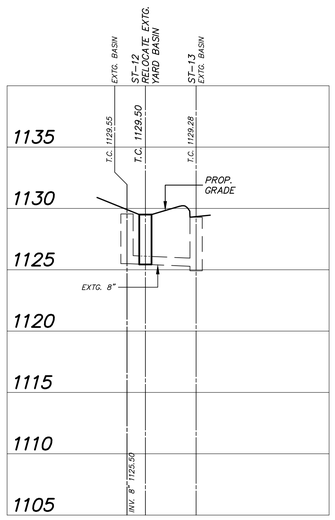

STORM SEWER PROFILE-E

HORIZ. SCALE: 1"=20' VERT. SCALE: 1"=5'

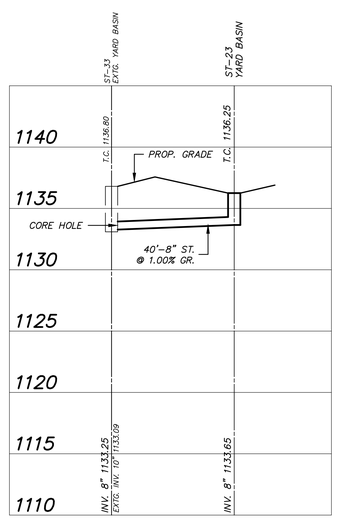

STORM SEWER PROFILE-F

HORIZ. SCALE: 1"=20' VERT. SCALE: 1"=5'

Code Consultant
PHILIP R. SHERMAN, P.E.
P.O. BOX 216
ELKINS, NH 03233-0216
603-526-6190

Kitchen Consultant
RICCA DESIGN STUDIOS
515 WASHINGTON STREET
NORWELL, MA 02061
303-621-6327

Landscape Architect
STEPHEN STIMSON ASSOCIATES
15 DEPOT AVENUE
FALMOUTH, MA 02540
508-548-8119

Civil Engineer
DONALD G. BOHNING & ASSOCIATES
7979 PUB PARKWAY
VALLEY VIEW, OH 44125
216-642-1130

Mechanical, Electrical, & Plumbing Engineer
KARPINSKI ENGINEERING
3135 EUCLID AVENUE
CLEVELAND, OH 44115
216-391-3700

Structural Engineer
GILSANZ MURRAY STEFICEK, LLP
129 WEST 27TH STREET
NEW YORK, NY 10001
212-254-0030

CENTERBROOK
Architects and Planners, LLP
67 Main Street
Post Office Box 955
Centerbrook, Connecticut 06409-0955
Telephone 860.767.0175
Facsimile 860.767.8719

STATE OF OHIO — EDWARD J. WISE — E-61631 — REGISTERED PROFESSIONAL ENGINEER

THE PARK SYNAGOGUE
27500 SHAKER BOULEVARD
PEPPER PIKE, OHIO 44124

ISSUED:

No	Name	Date

PHASE:
SITE DEVELOPMENT PLAN APPROVAL

DRAWING NAME:
UTILITY PROFILES

JOB #: 1721 (DGB#3406-8)

© 2021 CENTERBROOK ARCHITECTS AND PLANNERS

DRAWN BY: TM | DATE: 06/30/2021
CHECKED BY: EK | SCALE: AS NOTED

SHEET:
C7.00

M:\projects\jobs\3000-3499\3406-8\dwg\3406c8 C7.0.dwg 6/18/2021 - 1:12pm

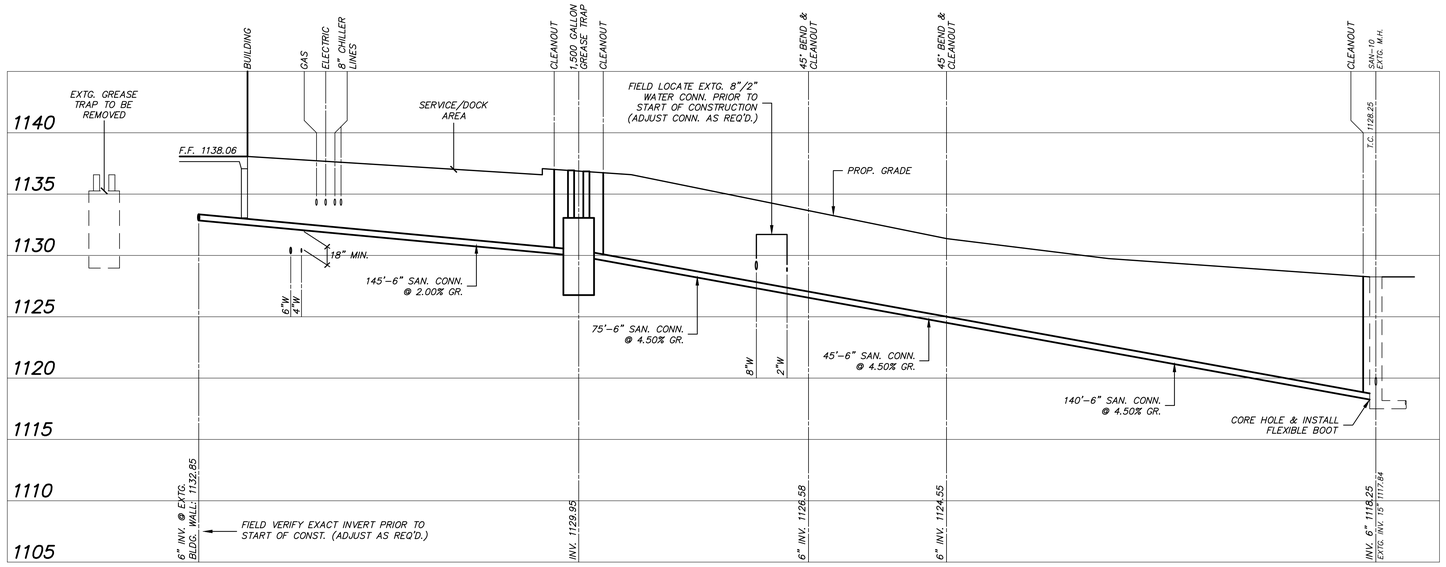

SANITARY GREASE TRAP CONNECTION PROFILE

HORIZ. SCALE: 1"=20' VERT. SCALE: 1"=5'

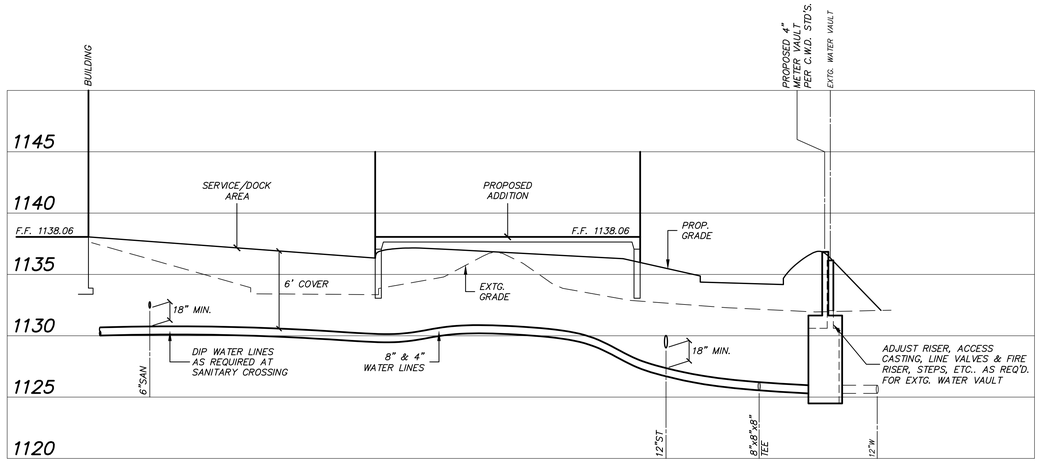

WATER MAIN RELOCATION PROFILE

HORIZ. SCALE: 1"=20' VERT. SCALE: 1"=5'

Code Consultant
PHILIP R. SHERMAN, P.E.
P.O. BOX 216
ELKINS, NH 03233-0216
603-526-6190

Kitchen Consultant
RICCA DESIGN STUDIOS
515 WASHINGTON STREET
NORWELL, MA 02061
303-621-6327

Landscape Architect
STEPHEN STIMSON ASSOCIATES
15 DEPOT AVENUE
FALMOUTH, MA 02540
508-548-8119

Civil Engineer
DONALD G. BOHNING & ASSOCIATES
7979 PUB PARKWAY
VALLEY VIEW, OH 44125
216-642-1130

Mechanical, Electrical, & Plumbing Engineer
KARPINSKI ENGINEERING
3135 EUCLID AVENUE
CLEVELAND, OH 44115
216-391-3700

Structural Engineer
GILSANZ MURRAY STEFICEK, LLP
129 WEST 27TH STREET
NEW YORK, NY 10001
212-254-0030

CENTERBROOK
Architects and Planners, LLP
67 Main Street
Post Office Box 955
Centerbrook, Connecticut 06409-0955
Telephone 860.767.0175
Facsimile 860.767.8719

STATE OF OHIO
DONALD M. WISE
E-61631
REGISTERED
PROFESSIONAL ENGINEER
9/10/2021

THE PARK SYNAGOGUE
27500 SHAKER BOULEVARD
PEPPER PIKE, OHIO 44124

ISSUED:

No	Name	Date

PHASE:
SITE DEVELOPMENT PLAN APPROVAL

DRAWING NAME:
UTILITY PROFILES

JOB #: 1721 (DGB#3406-8)

© 2021 CENTERBROOK ARCHITECTS AND PLANNERS

DRAWN BY: TM	DATE: 06/30/2021
CHECKED BY: EK	SCALE: AS NOTED

SHEET:
C7.01

NYLOPLAST 18" DRAIN BASIN: 2818AG _ _ X

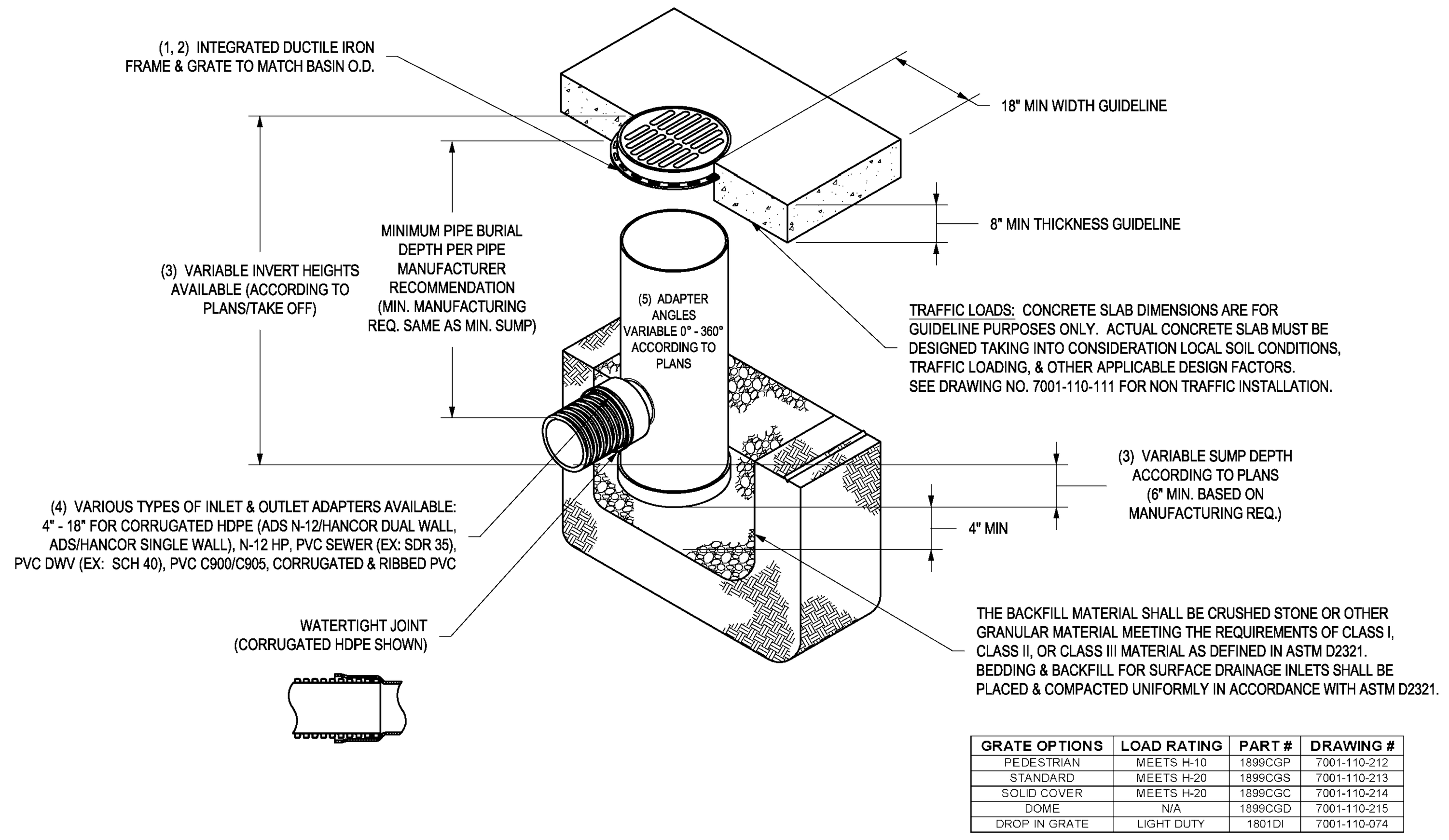

GRATE OPTIONS	LOAD RATING	PART #	DRAWING #
PEDESTRIAN	MEETS H-10	1899CGP	7001-110-212
STANDARD	MEETS H-20	1899CGS	7001-110-213
SOLID COVER	MEETS H-20	1899CGC	7001-110-214
DOME	N/A	1899CGD	7001-110-215
DROP IN GRATE	LIGHT DUTY	1801DI	7001-110-074

1 - GRATES/SOLID COVER SHALL BE DUCTILE IRON PER ASTM A536 GRADE 70-50-05.
2 - FRAMES SHALL BE DUCTILE IRON PER ASTM A536 GRADE 70-50-05.
3 - DRAIN BASIN TO BE CUSTOM MANUFACTURED ACCORDING TO PLAN DETAILS. RISERS ARE NEEDED FOR BASINS OVER 84" DUE TO SHIPPING RESTRICTIONS. SEE DRAWING NO. 7001-110-065.
4 - DRAINAGE CONNECTION STUB JOINT TIGHTNESS SHALL CONFORM TO ASTM D3212 FOR CORRUGATED HDPE (ADS N-12/HANCOR DUAL WALL), N-12 HP, & PVC SEWER.
5 - ADAPTERS CAN BE MOUNTED ON ANY ANGLE 0° TO 360°. TO DETERMINE MINIMUM ANGLE BETWEEN ADAPTERS SEE DRAWING NO. 7001-110-012.

THIS PRINT DISCLOSES SUBJECT MATTER IN WHICH NYLOPLAST HAS PROPRIETARY RIGHTS. THE RECEIPT OR POSSESSION OF THIS PRINT DOES NOT CONFER, TRANSFER, OR LICENSE THE USE OF THE DESIGN OR TECHNICAL INFORMATION SHOWN HEREIN REPRODUCTION OF THIS PRINT OR ANY INFORMATION CONTAINED HEREIN, OR MANUFACTURE OF ANY ARTICLE HEREFROM, FOR THE DISCLOSURE TO OTHERS IS FORBIDDEN, EXCEPT BY SPECIFIC WRITTEN PERMISSION FROM NYLOPLAST. ©2013 NYLOPLAST

DRAWN BY EBC | DATE 04-03-06 | REVISED BY NMH | DATE 03-14-16 | DWG SIZE A | SCALE 1:30 | SHEET 1 OF 1 | MATERIAL | PROJECT NO./NAME

Nyloplast — 3130 VERONA AVE, BUFORD, GA 30518, PHN (770) 932-2443, FAX (770) 932-2490, www.nyloplast-us.com

TITLE: 18 IN DRAIN BASIN QUICK SPEC INSTALLATION DETAIL | DWG NO. 7001-110-191 | REV E

NYLOPLAST TURF TRAFFIC INSTALLATION

12" - 36" DRAIN BASIN / 12" - 30" INLINE DRAIN

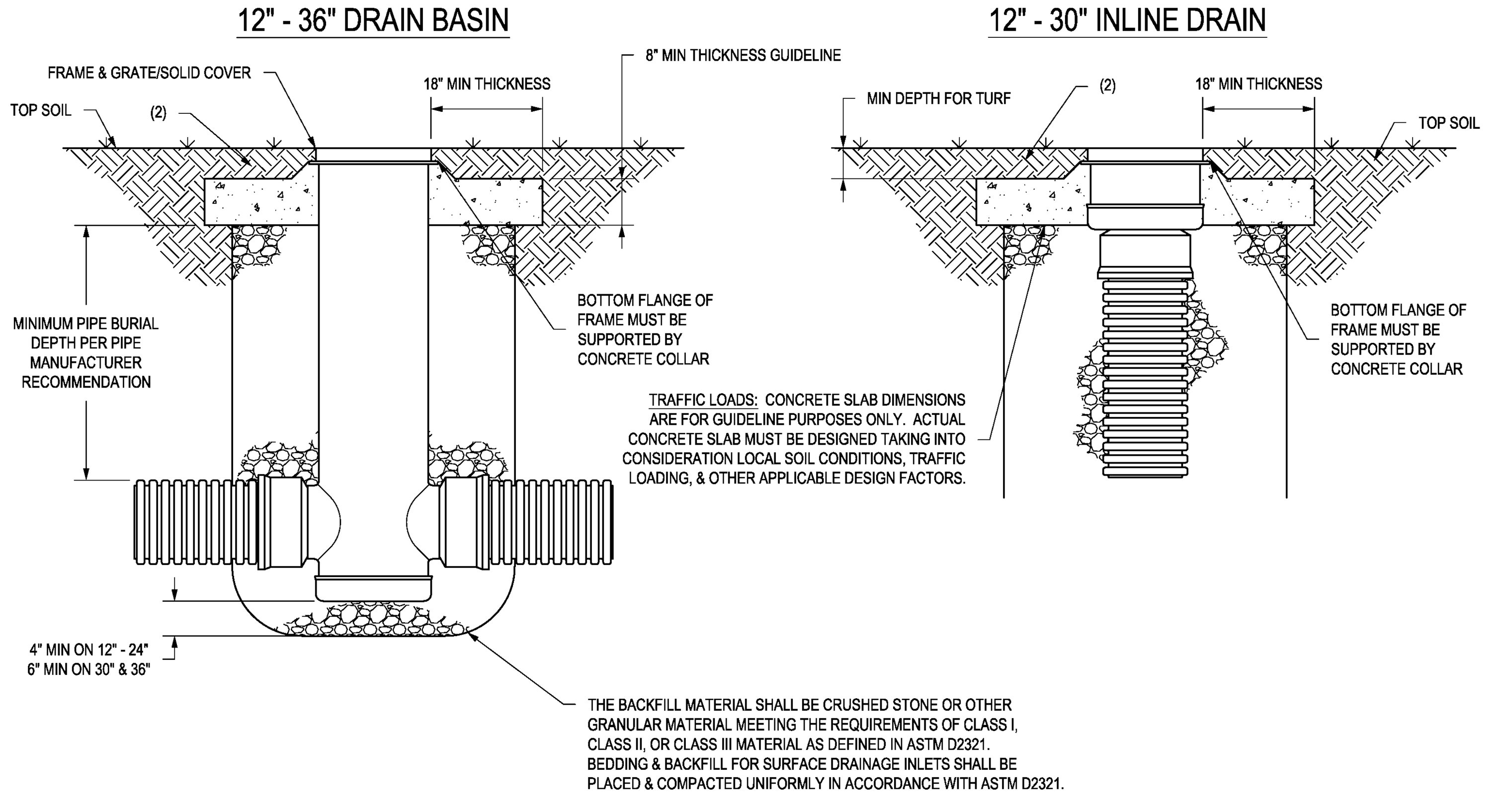

1. GRATES/SOLID COVERS SHALL MEET H-20 LOAD RATING FOR 30" PEDESTRIAN & 12" - 30" STANDARD & SOLID
2. DESIGN SHOULD ACCOUNT FOR ROOT DEPTH TO ALLOW TURF TO GROW AND PREVENT EROSION AROUND GRATE SO THAT HAZARDS DO NOT FORM.

THIS PRINT DISCLOSES SUBJECT MATTER IN WHICH NYLOPLAST HAS PROPRIETARY RIGHTS. THE RECEIPT OR POSSESSION OF THIS PRINT DOES NOT CONFER, TRANSFER, OR LICENSE THE USE OF THE DESIGN OR TECHNICAL INFORMATION SHOWN HEREIN REPRODUCTION OF THIS PRINT OR ANY INFORMATION CONTAINED HEREIN, OR MANUFACTURE OF ANY ARTICLE HEREFROM, FOR THE DISCLOSURE TO OTHERS IS FORBIDDEN, EXCEPT BY SPECIFIC WRITTEN PERMISSION FROM NYLOPLAST. ©2013 NYLOPLAST

DRAWN BY EBC | DATE 01-05-09 | REVISED BY NMH | DATE 06-12-18 | DWG SIZE A | SCALE 1:25 | SHEET 1 OF 1 | MATERIAL | PROJECT NO./NAME

Nyloplast — 3130 VERONA AVE, BUFORD, GA 30518, PHN (770) 932-2443, FAX (770) 932-2490, www.nyloplast-us.com

TITLE: DRAIN BASIN & INLINE DRAIN TURF TRAFFIC INSTALLATION | DWG NO. 7001-110-340 | REV G

ST–27 YARD BASIN (18")

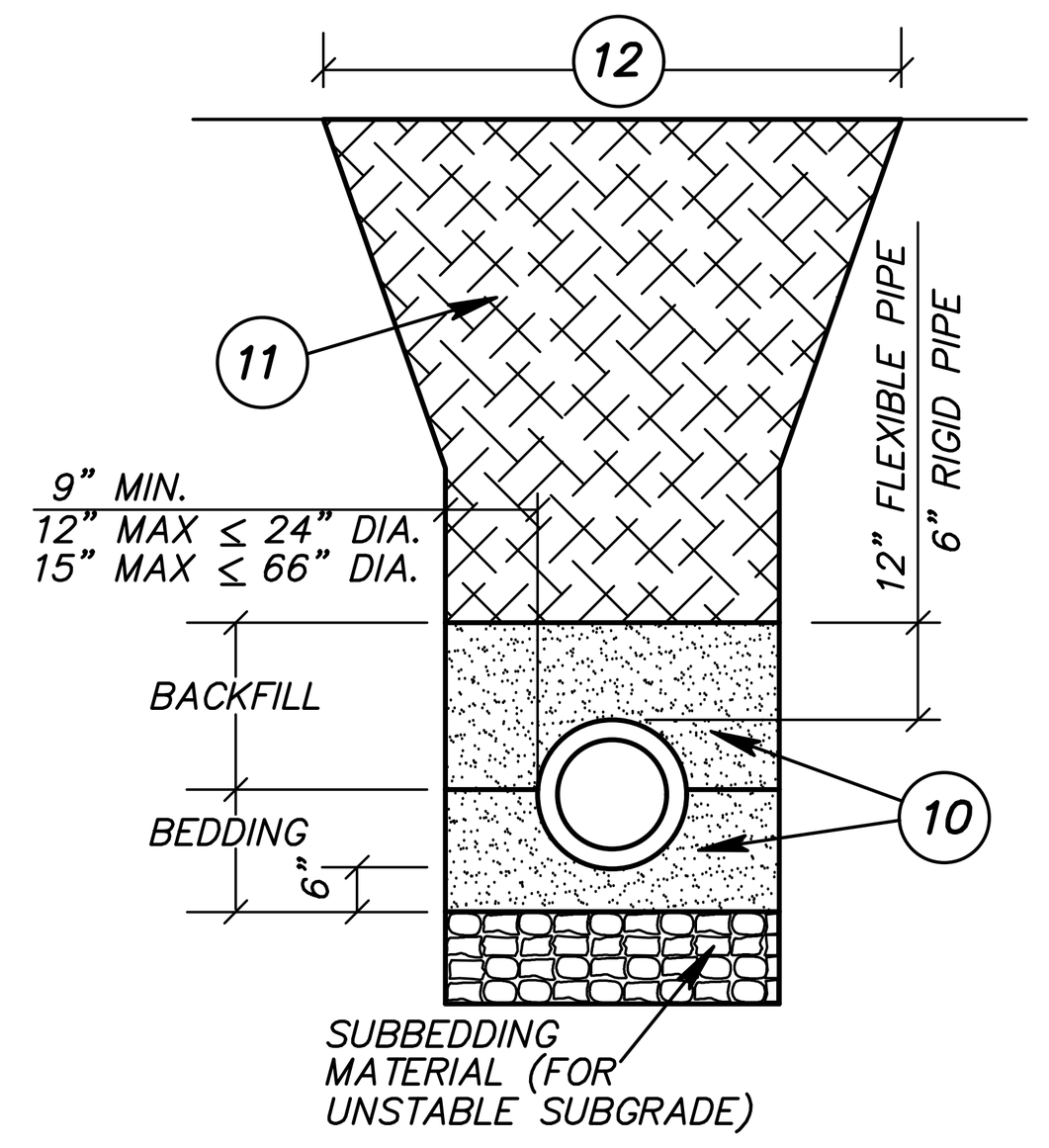

SEWER OR CONNECTION TRENCH DETAIL
SCALE: 3/8"=1'–0"

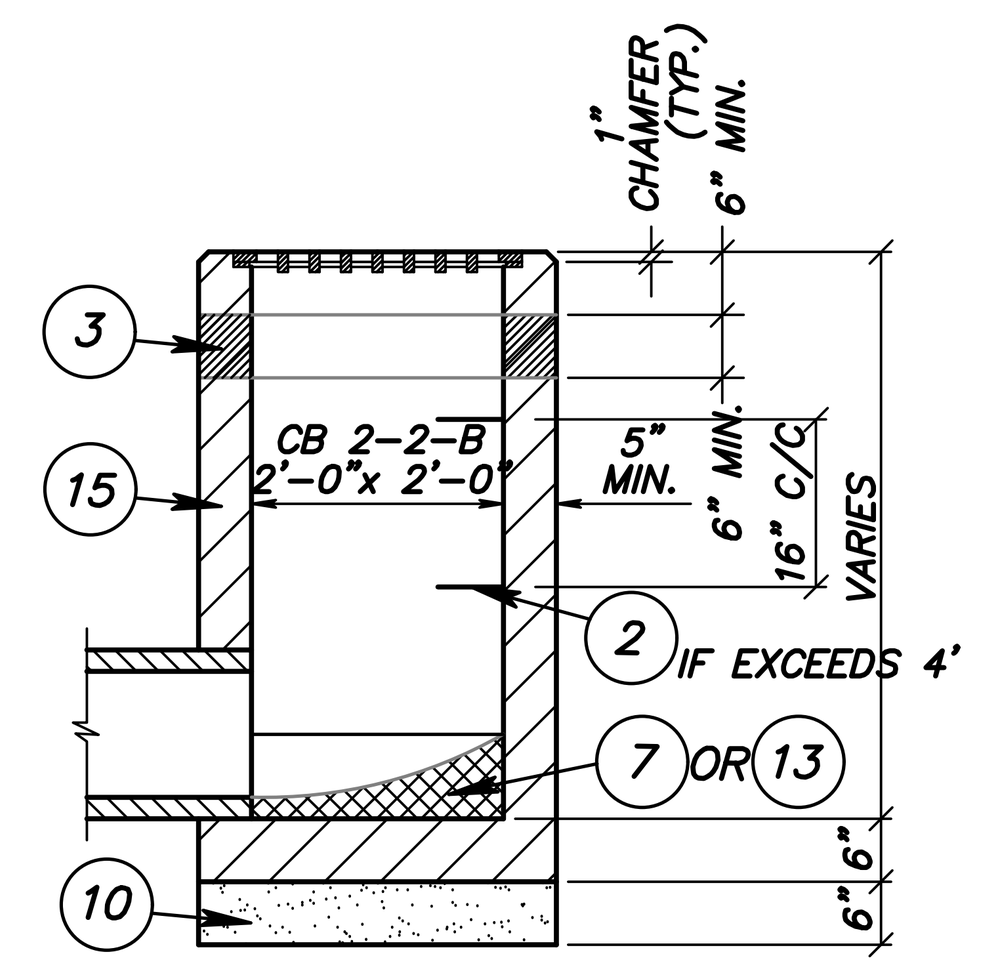

O.D.O.T. CB 2–2–B (YARD BASIN)
SCALE: 1/2"= 1'–0"

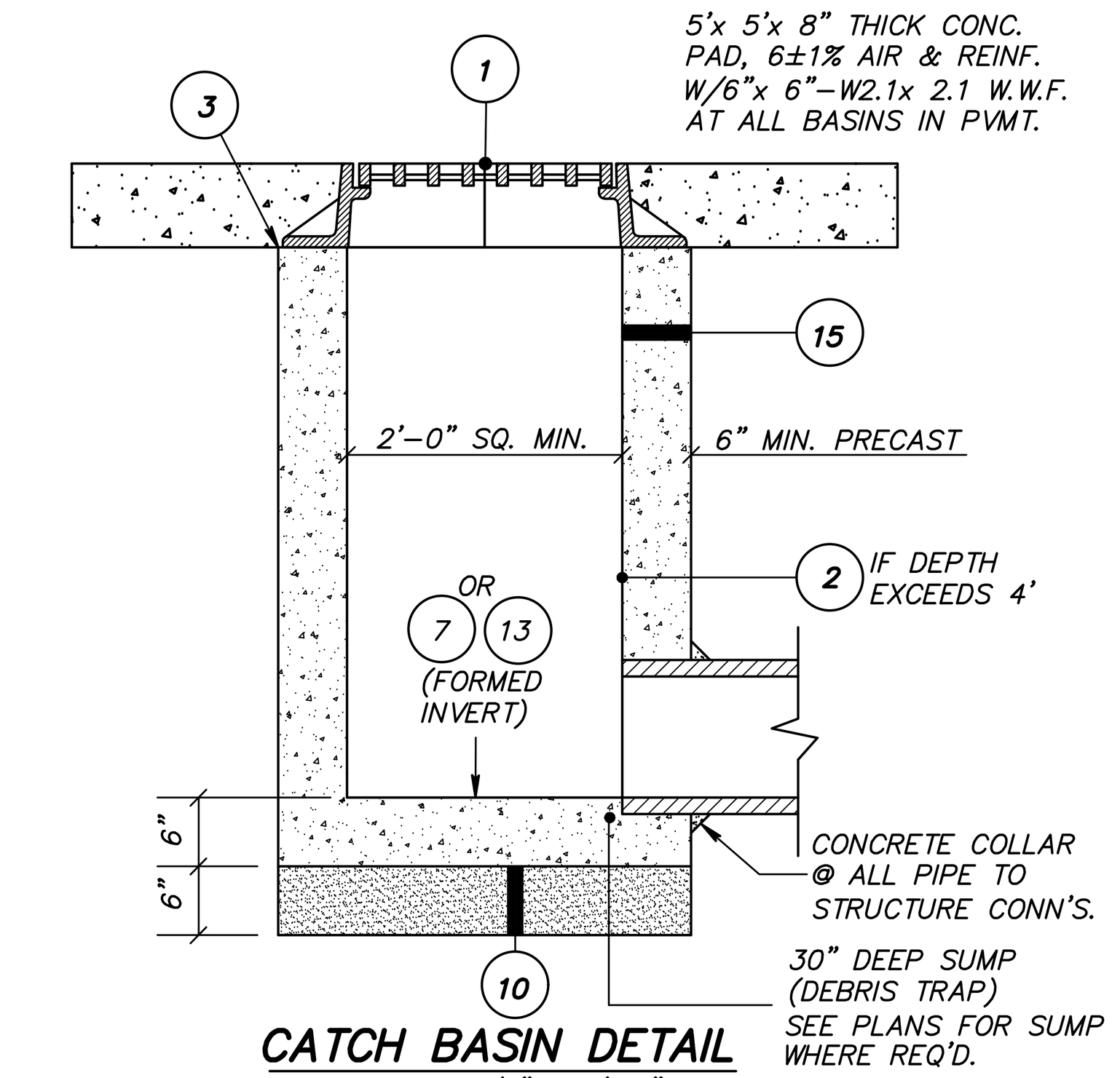

CATCH BASIN DETAIL
SCALE: 3/4" – 1'–0"

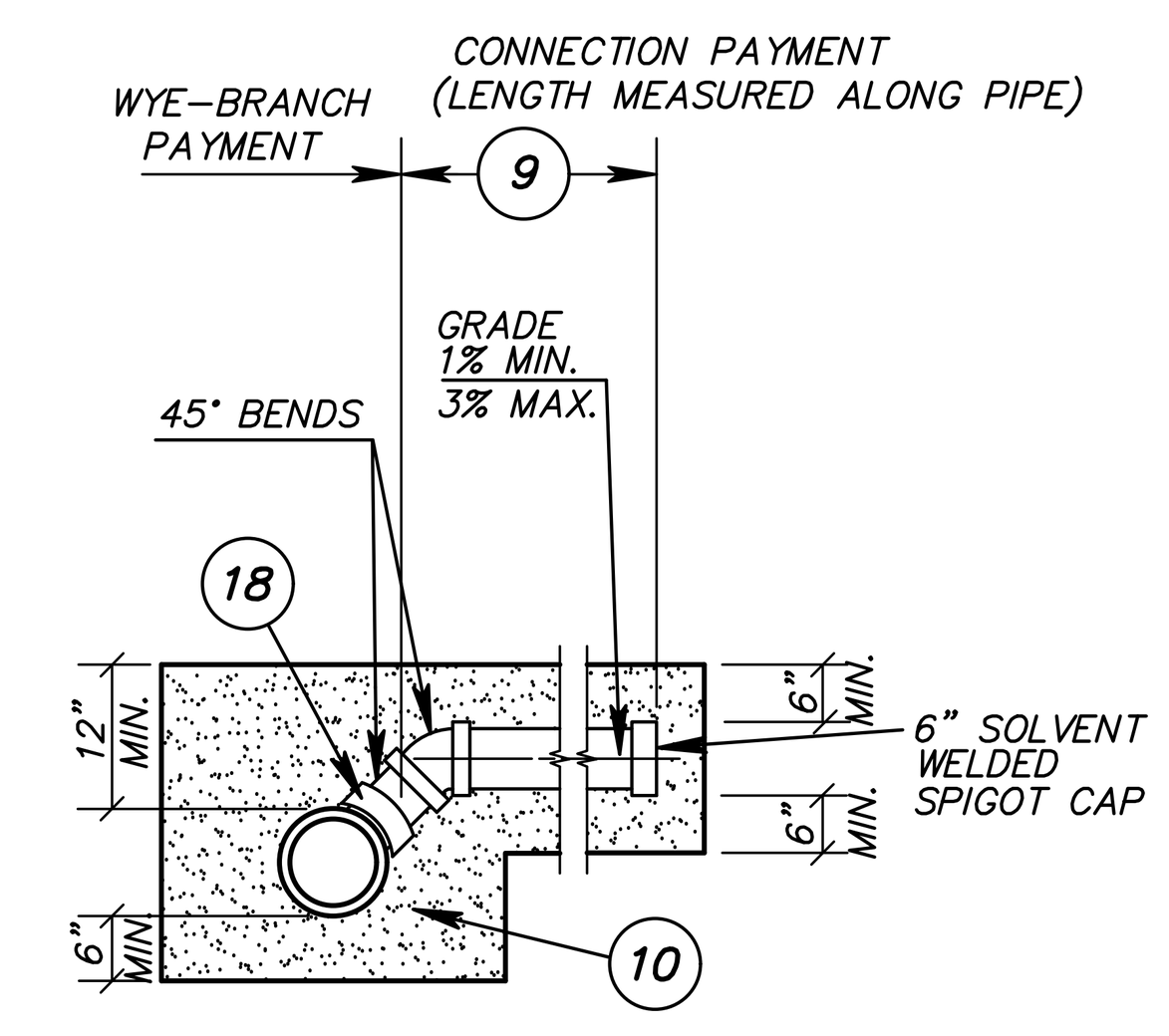

WYE–BRANCH AND CONNECTION DETAIL
SCALE: 3/8"= 1'–0"

NOTE: SEE PLANS FOR SUMP WHERE REQ'D.

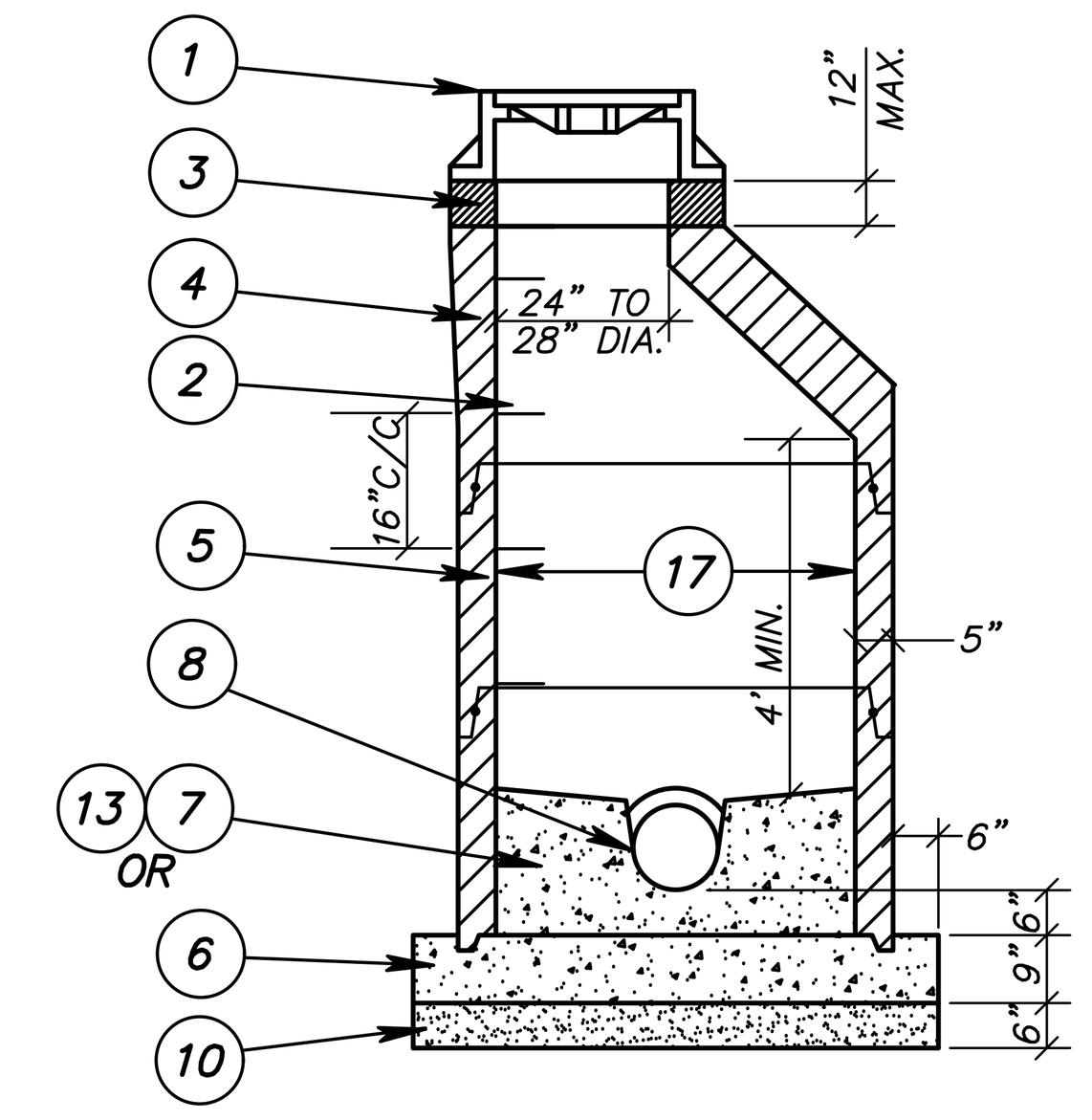

STORM OR SANITARY MANHOLE DETAIL
SCALE: 3/8"= 1'–0"

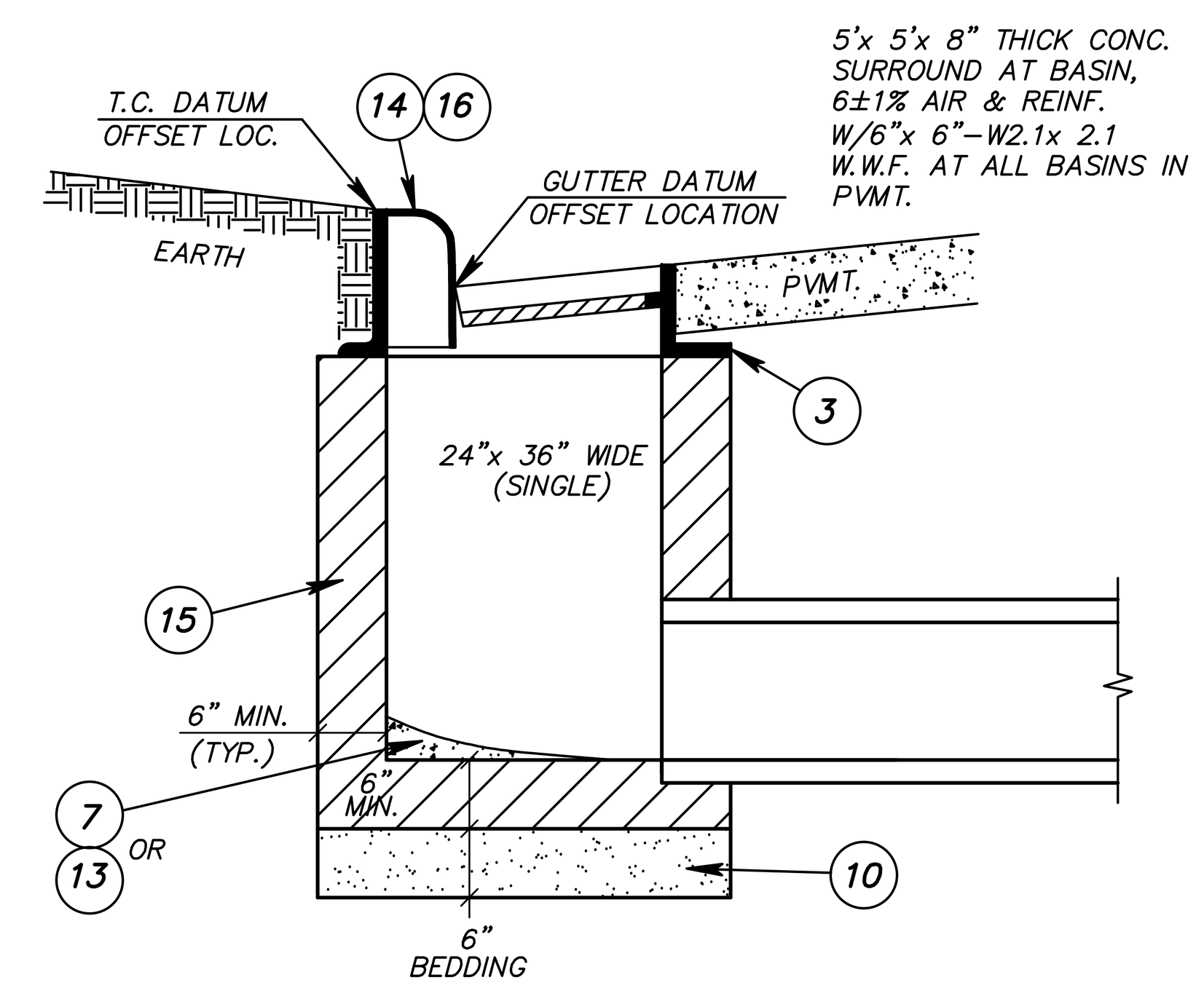

CURB INLET BASIN DETAIL
SCALE: 3/4"= 1'–0"

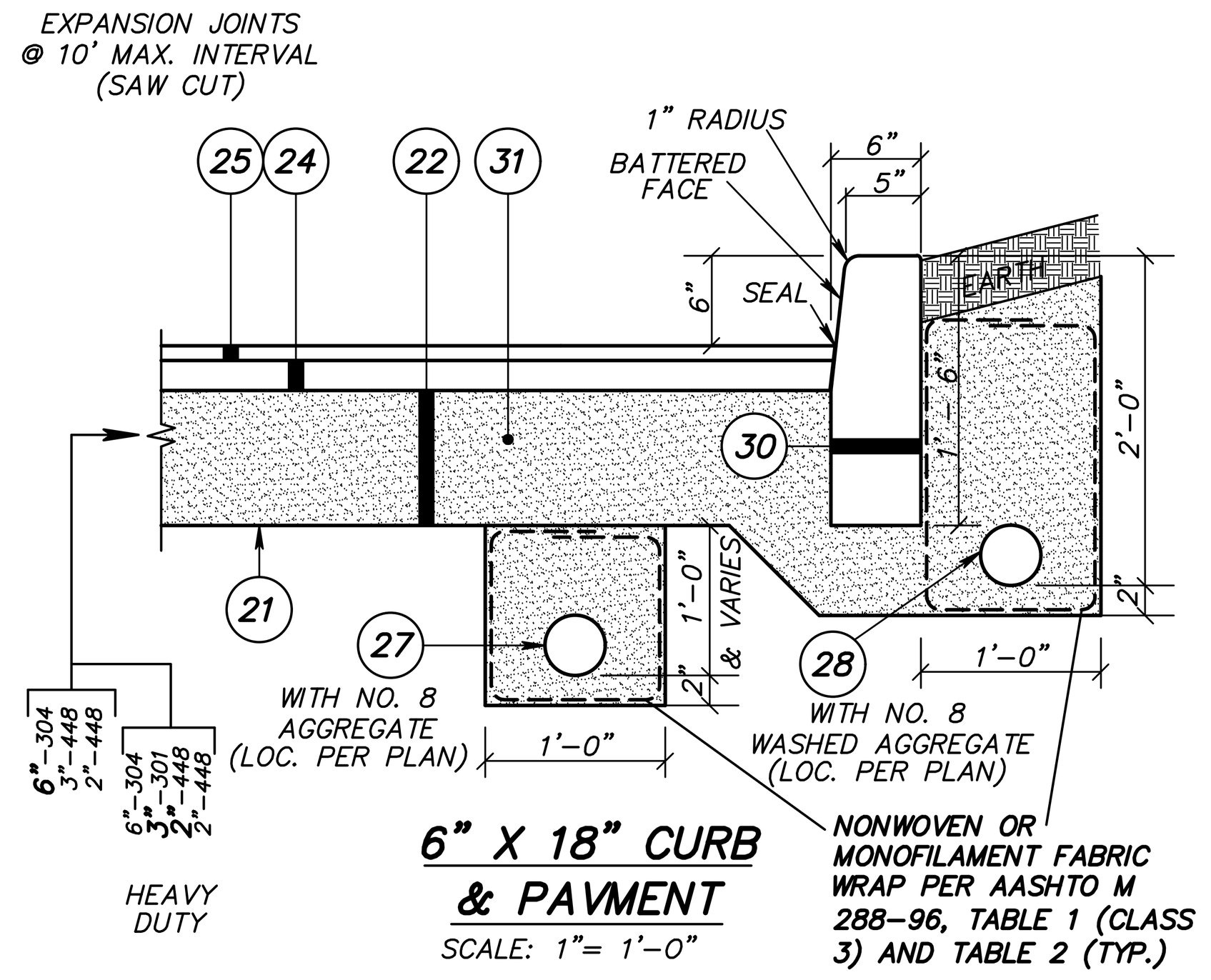

6" X 18" CURB & PAVMENT
SCALE: 1"= 1'–0"

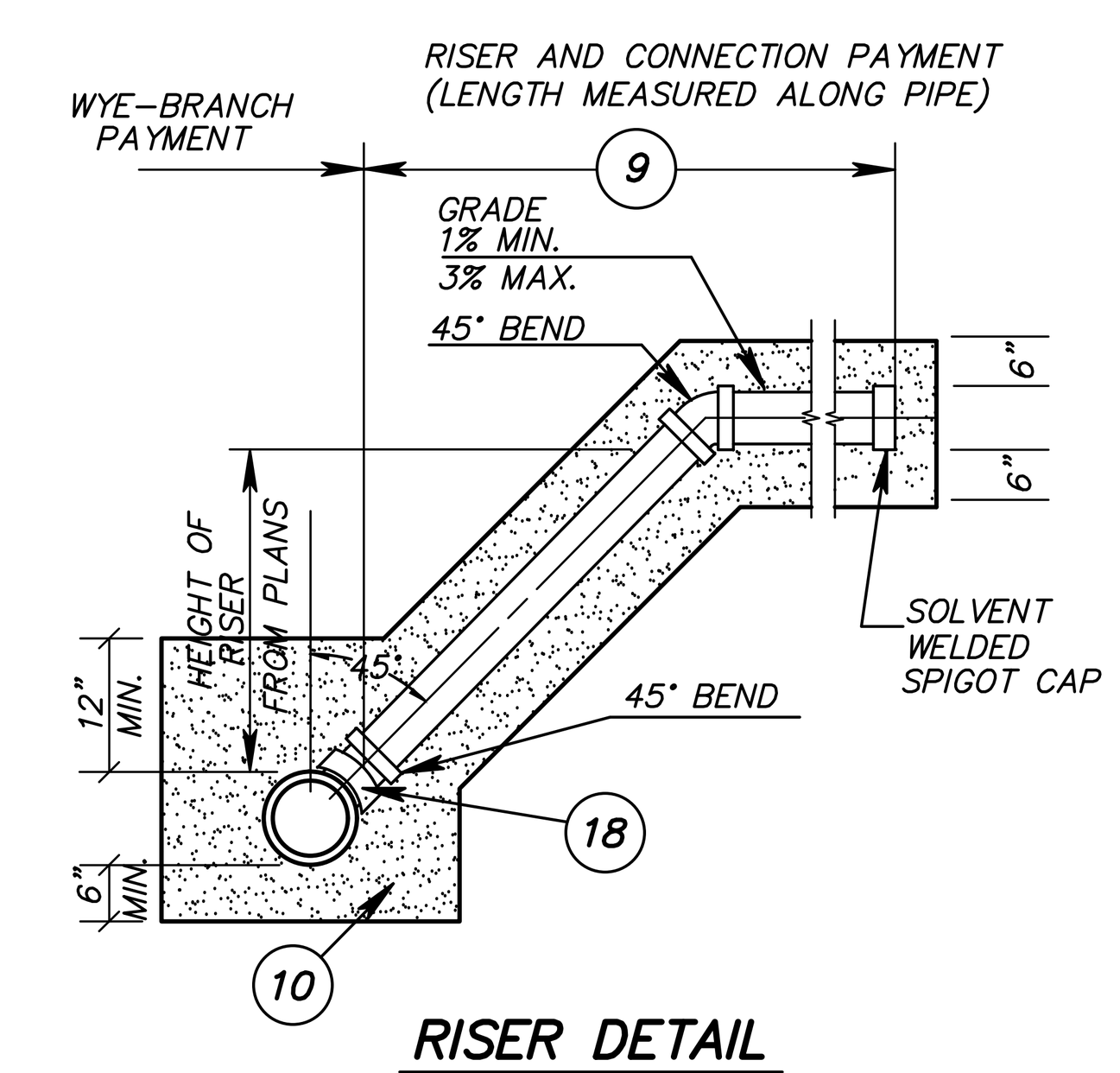

RISER DETAIL
SCALE: 3/8"= 1'–0"

IF THE RISER CAP FALLS WITHIN CONC. OR ASPH. PAVEMENT THEN THE RISER SHALL BE FITTED WITH A FRAME & LID CASTING, E.J.I.W. NO. 2970 FOR 6", E.J.I.W. NO. 2980 FOR 8", OR AN APPROVED EQUAL.

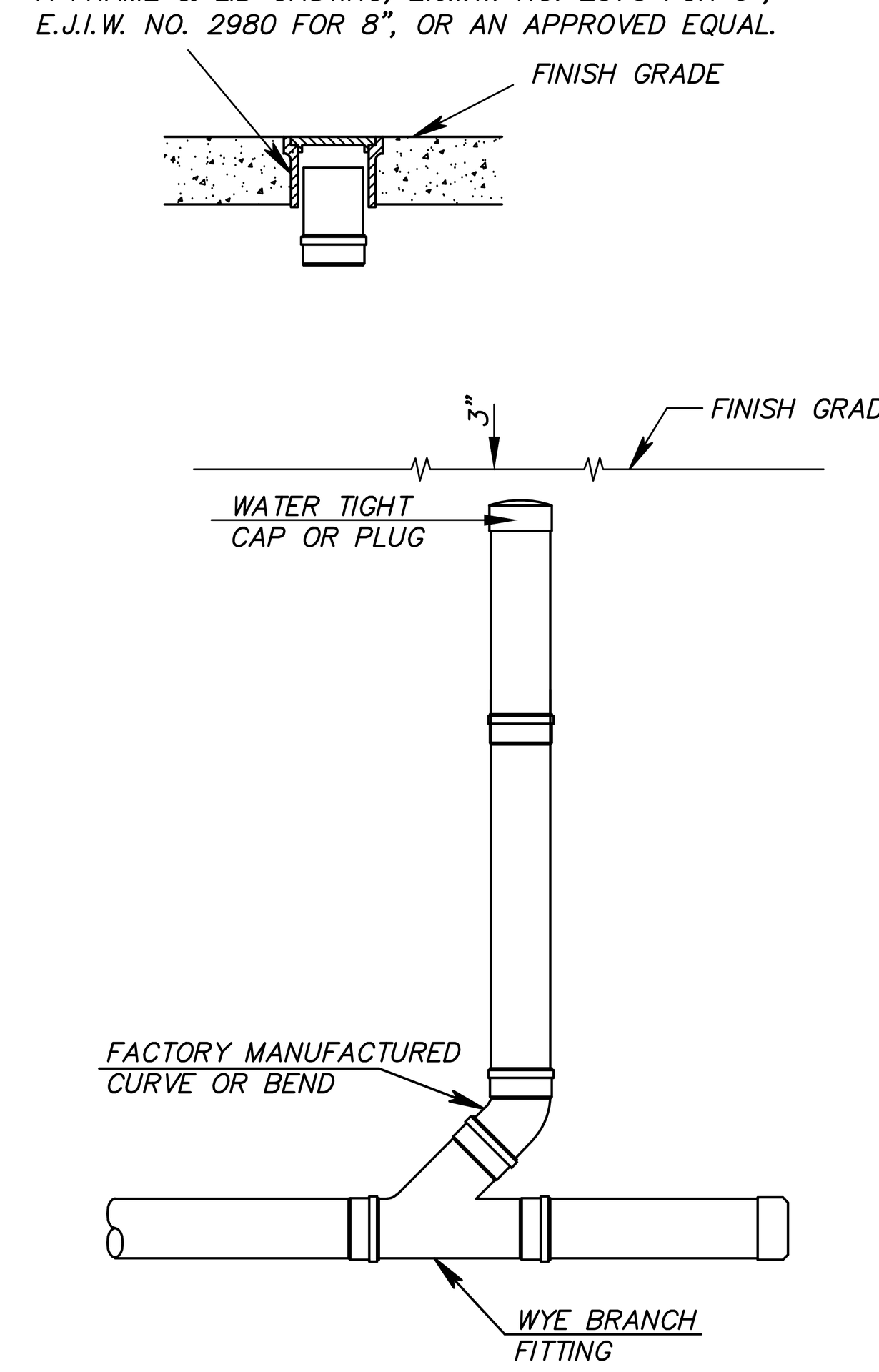

CLEANOUT DETAIL
NO SCALE

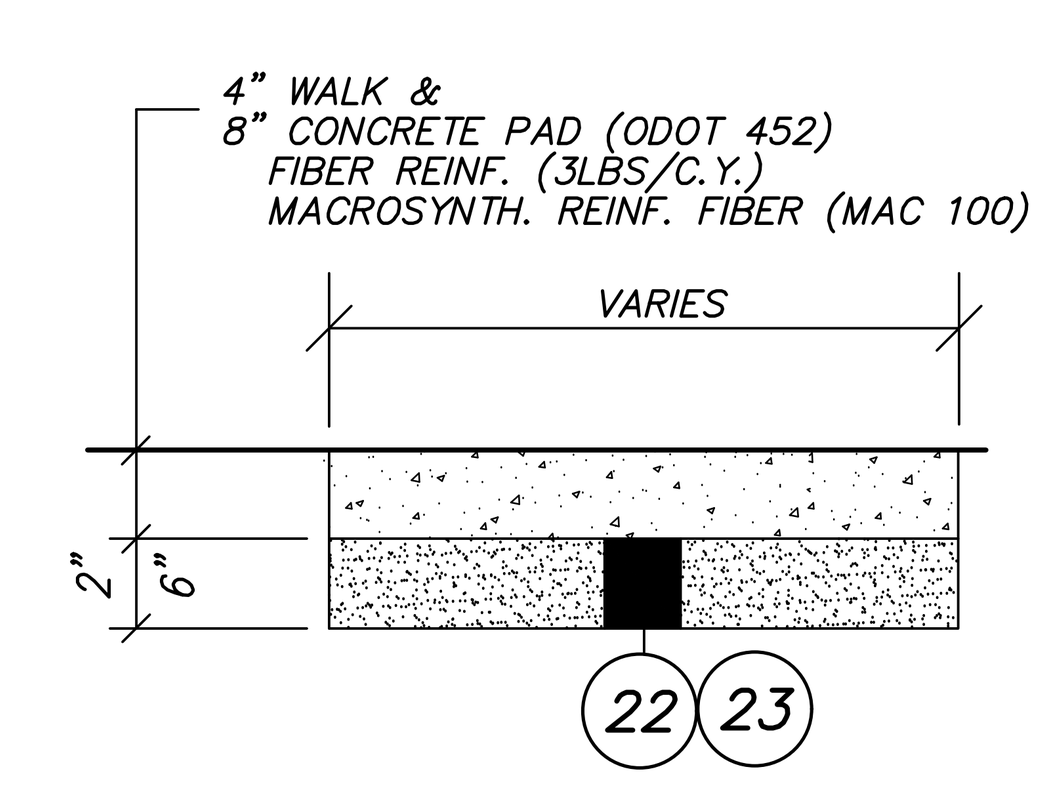

SIDEWALK & HEAVY DUTY CONCRETE PAVEMENT
NO SCALE

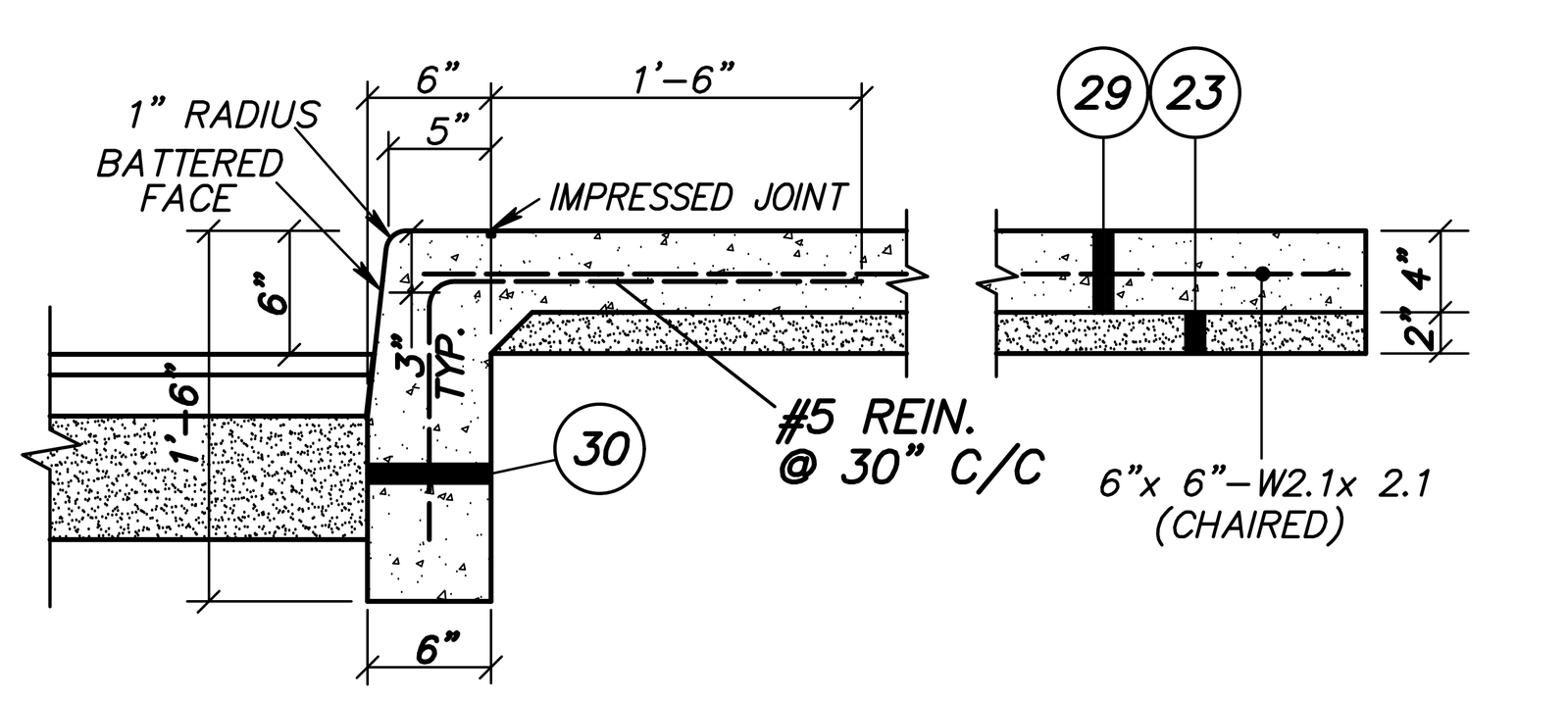

COMBINATION CURB & SIDEWALK
SCALE: 1"= 1'–0"

LEGEND

NO. DESCRIPTION

(1) MANHOLE FRAME AND COVER CASTING ALTERNATES (ALL FRAMES SET IN MORTAR BED):
(A) SANITARY MANHOLE – SOLID LID – EJIW NO. 1700 OR APPROVED EQUAL
(B) STORM MANHOLE – VENTED LID – EJIW NO. 1700 OR APPROVED EQUAL
(C) STORM MANHOLE WITH BEEHIVE GRATE – EJIW NO. 1700 WITH LOW–PROFILE (6" MAX. HEIGHT) BEEHIVE GRATE OR APPROVED EQUAL
(D) INLET BASIN WITH CURB BOX – EJIW NO. 7035 WITH TYPE M6 GRATE AND TYPE T4 BACK, OR APPROVED EQUAL
(E) CATCH BASIN OR INLET MANHOLE – EJIW NO. 5235

(2) MANHOLE STEPS: M.A. INDUSTRIES, INC. PS1–PF POLYPROPYLENE PLASTIC OR APPROVED EQUAL

(3) GRADE ADJUSTMENT BY USE OF:
(A) CAST–IN–PLACE CONCRETE;
(B) PRECAST CONCRETE ADJUSTING COLLARS (SET IN BED OF MORTAR);

(4) RISER ALTERNATES:
(A) MANHOLE – SOLID LID OR VENTED LID:
(1) ECCENTRIC CONE SECTION
(2) SLAB TOP (SHALLOW MANHOLE ONLY)
(B) INLET MANHOLE:
(1) SLAB TOP OR APPROVED EQUAL WITH CAST 24" X 36" RECTANGULAR OPENING

(5) PRECAST SECTIONS TO CONFORM TO ASTM C–478 WITH A RESILIENT GASKET JOINT CONFORMING TO ASTM C–443 FOR SAN. M.H. AND BITUMASTIC TYPE JOINT FOR ST. M.H., CYLINDRICAL SECTION OF MANHOLE TO BE EXTENDED VERTICALLY FROM INVERT SHELF A MINIMUM OF 4'0".

(6) BASE ALTERNATES:
(A) 9" OF 3000 PSI CONCRETE (OR AS DETAIL INDICATED) CAST–IN–PLACE
(B) PRECAST FLOOR AND BARREL ASSEMBLED IN THE FIELD
(C) MONOLITHIC FLOOR AND RISER
(D) PRECAST TEE SECTION (48" DIA. MIN.)

(7) SHELF FORMED WITH ASTM C–32 BRICK MASONRY WITH 1/2" CEMENT MORTAR PLASTER, SLOPED 1/2"/FT. OR CONCRETE PRECAST IN BASE.

(8) SANITARY MANHOLE: MANHOLE TO PIPE OR PIPE TO PIPE JOINT SHALL BE A WATER TIGHT CONNECTION PROVIDING A FLEXING AND LATERAL MOVEMENT WITHOUT SHEARING OF THE SEWER PIPE, INSTALLED PER ASTM C–923.
STORM MANHOLE: ALL HOLES FOR PIPE TO MANHOLE CONNECTIONS ARE TO BE CORED AT THE TIME OF PRECAST MANUFACTURE. THESE CORED HOLES SHALL HAVE MEASURED ALONG THE INSIDE PERIMETER OF THE MANHOLE A MINIMUM DISTANCE OF 8" BETWEEN ADJACENT HOLES. MINIMUM MANHOLE DIAMETERS SHALL BE INCREASED ACCORDINGLY

CONCRETE COLLARS SHALL BE INSTALLED TO EXTERIOR OF PIPE @ POINT OF CONN. TO STRUCTURE.

(9) 6" DIAMETER PVC RISER AND/OR CONNECTION

(10) CRUSHED STONE AGGREGATE NO. 67, THOROUGHLY COMPACTED (NO SLAG), INSTALLED PER ASTM D–2321.

(11) TRENCH BACKFILL:
(A) NON–COMPACTED BACKFILL – EXCAVATED SOIL OR GRANULAR MATERIAL AS APPROVED BY THE OWNER.
(B) COMPACTED BACKFILL – UNDER ALL EXISTING PAVEMENT, DRIVE, SIDEWALK, PROPOSED PAVEMENT OR AS PLAN INDICATED, INCLUDING TO A POINT FIVE (5) FEET FROM SUCH CROSSING, AS DIRECTED BY THE OWNER, THE ENTIRE TRENCH SHALL BE FILLED IN LAYERS NOT TO EXCEED (8) INCHES IN THICKNESS AND COMPACTED WITH MECHANICAL TAMPERS AT THE SPECIFIED MOISTURE CONTENT UNTIL ITS DRY DENSITY IS NOT LESS THAN 98% OF THE MAXIMUM LABORATORY DRY DENSITY AS DETERMINED BY THE STANDARD PROCTOR METHOD OF MOISTURE–DENSITY RELATIONSHIP TESTING, USING COMPACTED ODOT 304 AGGREGATE (LIMESTONE).
(MATERIAL TO BE APPROVED BY THE OWNER.)

(12) ALL OPEN TRENCH EXCAVATIONS ARE TO COMPLY WITH MINIMUM OSHA SAFETY STANDARDS. IF ANY LONGITUDINAL TRENCH EXCAVATION IS WITHIN 2 FEET OF AN EXISTING PAVEMENT EDGE THE ENTIRE TRENCH SHALL HAVE "COMPACTED BACKFILL".

(13) CLASS "C" (4000 PSI) CONCRETE (ODOT ITEM 511) 6% AIR

(14) BASIN FRAME AND GRATE EJIW NO. 7035 WITH TYPE M6 GRATE AND TYPE T4 BACK OR APPROVED EQUAL SET IN A BED OF MORTAR

(15) PRECAST CONSTRUCTION MEETING ODOT 706.13 – CLASS C (4000 PSI) CONCRETE, WITH CURB DRAIN AND PIPE CONNECTION HOLES CORED AT THE TIME OF PRECAST MANUFACTURE. (IF APPLICABLE) 6% AIR

(16) 3/4" THICK PREMOLDED EXPANSION JOINT MATERIAL AT BASIN & CURB.

(17) MANHOLE DIAMETER:
(A) 48" FOR PIPE SIZES LESS THAN OR EQUAL TO 30"
(B) 60" FOR PIPE SIZES MORE THAN 30" BUT LESS THAN OR EQUAL TO 42"
(C) INCREASE DIAMETER ACCORDINGLY TO MAINTAIN MINIMUM 8" BETWEEN ADJACENT HOLES MEASURED ALONG INSIDE PERIMETER.

(18) WYE BRANCH: APPROVED WYE FITTING OR SADDLE.

LEGEND

NO.	O.D.O.T. ITEM	DESCRIPTION
(21)	203	SUBGRADE PREPARATION
(22)	304	AGGREGATE BASE
(23)	304	AGGREGATE BASE (703.10 MATERIAL) (LIMESTONE)
(24)	448	ASPHALT CONCRETE
(25)	448	ASPHALT CONCRETE
(27)	605	4" SMOOTH WALL UNDERDRAIN P.V.C. PIPE CONFORMING TO ASTM D–3034 SDR35 (LOCATION PER PLAN)
(28)	605	4" SMOOTH WALL UNDERDRAIN P.V.C. PIPE CONFORMING TO ASTM D–3034 SDR35 (LOCATION PER PLAN)
(29)	608	CONCRETE WALK USING 6"x 6"–W2.1x 2.1 (CHAIRED)
(30)	609	CONCRETE CURB
(31)	301	ASPHALT CONCRETE

NOTE: ALL CONCRETE TO FOLLOW ODOT 499 GENERAL SPECIFICATION INCLUDING 6±1% AIR.

Code Consultant
PHILIP R. SHERMAN, P.E.
P.O. BOX 216
ELKINS, NH 03233-0216
603-526-6190

Kitchen Consultant
RICCA DESIGN STUDIOS
515 WASHINGTON STREET
NORWELL, MA 02061
303-621-6327

Landscape Architect
STEPHEN STIMSON ASSOCIATES
15 DEPOT AVENUE
FALMOUTH, MA 02540
508-548-8119

Civil Engineer
DONALD G. BOHNING & ASSOCIATES
7979 PUB PARKWAY
VALLEY VIEW, OH 44125
216-642-1130

Mechanical, Electrical, & Plumbing Engineer
KARPINSKI ENGINEERING
3135 EUCLID AVENUE
CLEVELAND, OH 44115
216-391-3700

Structural Engineer
GILSANZ MURRAY STEFICEK, LLP
129 WEST 27TH STREET
NEW YORK, NY 10001
212-254-0030

CENTERBROOK
Architects and Planners, LLP
67 Main Street
Post Office Box 955
Centerbrook, Connecticut 06409-0955
Telephone 860.767.0175
Facsimile 860.767.8719

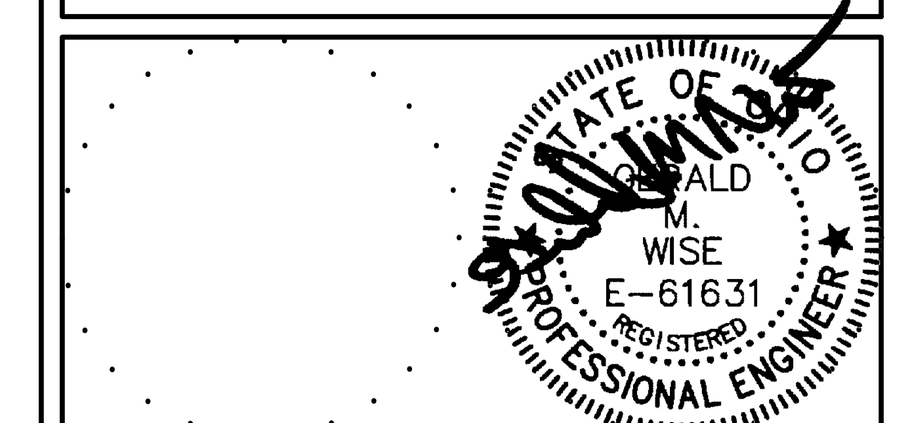

THE PARK SYNAGOGUE
27500 SHAKER BOULEVARD
PEPPER PIKE, OHIO 44124

ISSUED:

No	Name	Date

PHASE: SITE DEVELOPMENT PLAN APPROVAL

DRAWING NAME: DETAILS

JOB #: 1721 (DGB#3406-8)

© 2021 CENTERBROOK ARCHITECTS AND PLANNERS

DRAWN BY: TM | DATE: 06/30/2021
CHECKED BY: EK | SCALE: AS NOTED

SHEET: C8.00

M:\adcadd\p\3000–3499\3406–8\dwg\340608 C8.0.dwg 6/18/2021 – 1:11pm

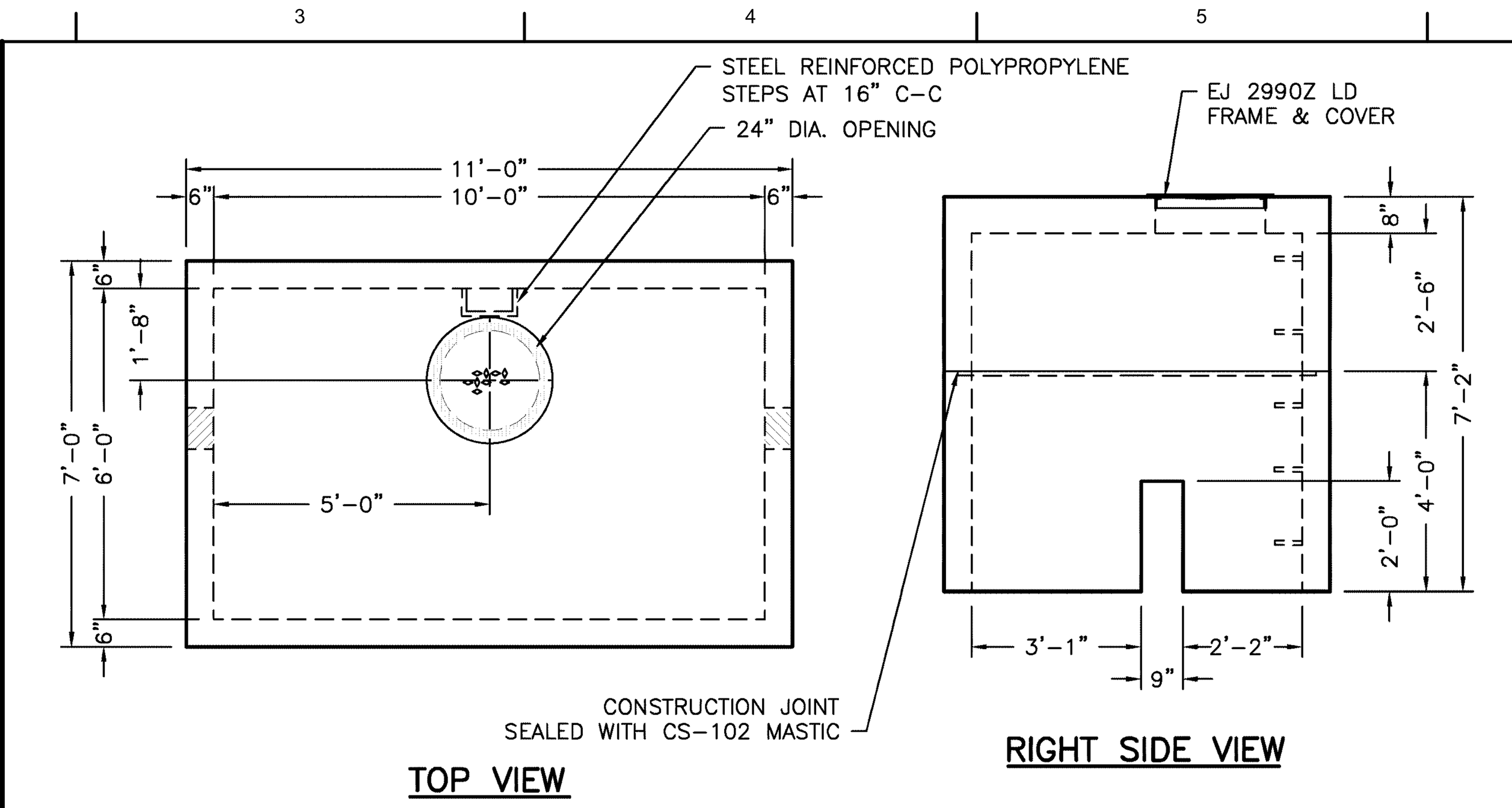

NOTES:
1. APPROVED BY THE CITY OF CLEVELAND DIVISION OF WATER.
2. PRECAST CONCRETE TO A COMPRESSIVE STRENGTH OF 5,000 PSI AT 28 DAYS.
3. HEAVIEST LIFT 3.42 YDS = 13,840#

MACK ITEM#
20501N
20511N
87010
51012 (1 CARTON MASTIC)

M10MV METER VAULT NON-TRAFFIC BEARING 4" DOMESTIC SERVICE

DRAWN BY: ADM	SCALE: 3/8"=1'	DRAWING NO.:
DATE: 3/4/02	REV: 1/17/20 REA	M10MV-NT

MACK INDUSTRIES, INC.
201 COLUMBIA ROAD, VALLEY CITY, OHIO 44280 (330) 483-3111

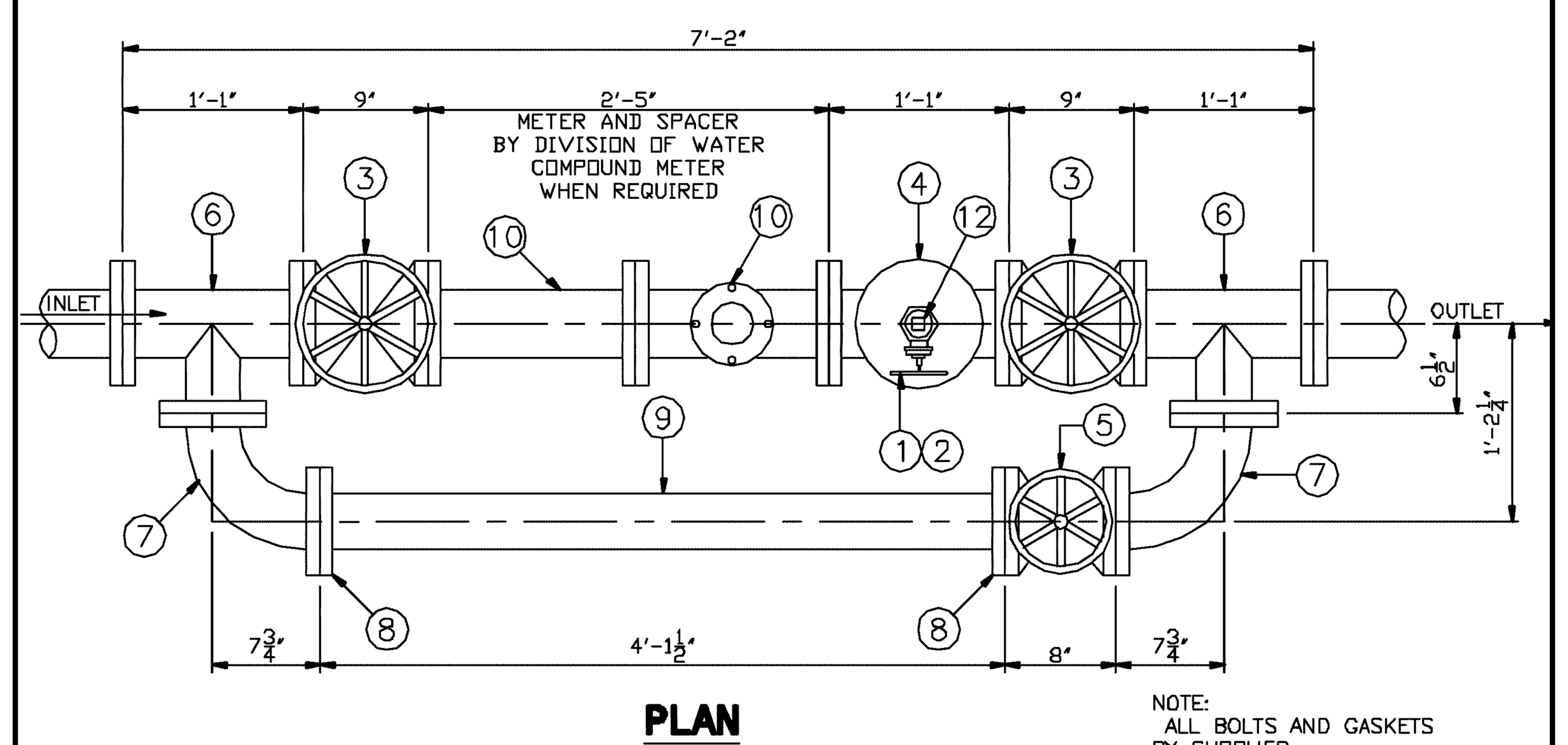

NOTE:
ALL BOLTS AND GASKETS BY SUPPLIER.

NOTE:
MINOR VARIATIONS IN THE OVERALL LENGTH ARE TO BE EXPECTED DEPENDING ON THE TEE'S, VALVES, AND CHECK VALVES SUPPLIED.
ADJUSTMENTS TO THE BYPASS (ITEM No. 9) WILL BE MADE BY THE DIVISION OF WATER AS NEEDED.

STANDARD DETAILS
DEPARTMENT OF PUBLIC UTILITIES
DIVISION OF WATER
CLEVELAND, OHIO
SUBJECT STANDARD 4" METER SETTING WITH 4" METER FOR VAULTS
DRAWN BY RSK -SCALE- 3/16" = 1'
DATE 10-1-1997
CHECKED BY MJS DATE 10-1-97
STD-M08

MATERIALS REQUIRED FOR INSTALLATION

STANDARD 4" METER SETTING WITH 4" METER

ITEM	REQ'D	SIZE	DESCRIPTION
1	1	2"	HAND WHEEL GATE VALVE,SCREWED
2	1	2" x 10"	BRASS NIPPLE
3	2	4"	HAND WHEEL GATE VALVES, FLANGED
4	1	4"	SWING CHECK VALVE, FLANGED
5	1	3"	O.S.Y. VALVE, FLANGED
6	2	4" x 3"	CAST IRON TEES, FLANGED
7	2	3"	CAST IRON ELBOWS, FLANGED LONG RADIUS
8	2	3" x 7-1/2"	CAST IRON FLANGE, 4 HOLE
9	5 FT.	3"	GALVANIZED PIPE, EXTRA HEAVY
10	1	4"	TURBINE METER OR COMPOUND METER (METER & SPACER PROVIDED BY C.W.D)
11	1	2"	BRASS PLUG
12	8	4"	FLANGE GASKETS
13	5	3"	FLANGE GASKETS
14	64	5/8" x 3"	MACHINE BOLTS
15	20	5/8" X 2-1/2"	MACHINE BOLTS
16	6	5/8" x 3-1/2"	STUD BOLTS
17	90	5/8"	HEX NUTS

(SEE DRAWING No. STD-M08 & STD-V01).

11-19-98

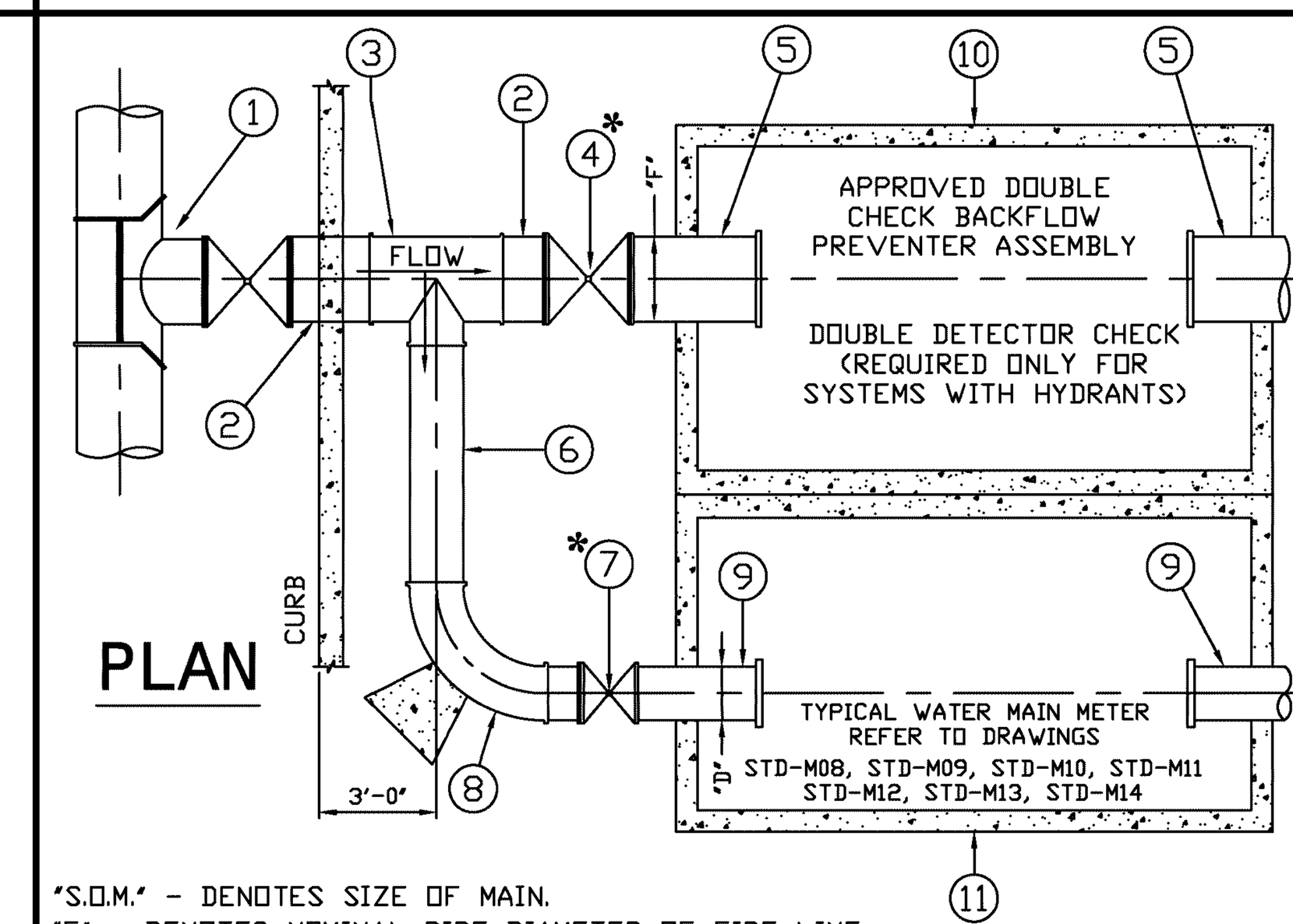

1. (1) S.O.M. x FIRE LINE ('F') SIZED MECHANICAL JOINT BRANCH SLEEVE AND 'F' SQUARE HEAD GATE TAP VALVE WITH RETAINED MECHANICAL JOINT OUTLET AND VALVE BOX COMPLETE.
2. X FEET 'F' DUCTILE IRON CLASS 52 CEMENT LINED PLAIN END x PLAIN END PIPE (CUT TO SUIT). (IF PIPE IS LONGER THAN 1 PIPE LENGTH, THEN THE PIPE IS TO HAVE TYPE II BOLTLESS RESTRAINED PUSH-ON JOINTS.
3. (1) 'F' x 'F' x 'D' DUCTILE IRON CLASS 350 CEMENT LINED RETAINED MECHANICAL JOINT TEE. ✱
4. (1) 'F' RETAINED MECHANICAL JOINT, SQUARE HEAD GATE VALVE WITH VALVE BOX COMPLETE.
5. X FEET 'F' PLAIN END x FLANGED DUCTILE IRON CLASS 52 CEMENT LINED PIPE (CUT TO SUIT).
6. X FEET 'D' PLAIN END x PLAIN END DUCTILE IRON CLASS 52 CEMENT LINED PIPE (CUT TO SUIT).
7. (1) - 'D' RETAINED MECHANICAL JOINT SQUARE HEAD GATE VALVE WITH VALVE BOX COMPLETE.
8. (1) - 'D' RETAINED MJ x MJ DUCTILE IRON CLASS 350 CEMENT LINED 90° BEND WITH CONCRETE PIER.
9. X FEET 'D' PLAIN END x FLANGED END DUCTILE IRON CLASS 52 CEMENT LINED PIPE (CUT TO SUIT).
10. (1) - APPROVED PRE-CAST FIRELINE VAULT.
11. (1) - APPROVED PRE-CAST DOMESTIC VAULT.

* CURB VALVES MUST BE LOCATED IN THE RIGHT OF WAY BUT MAY NOT BE LOCATED IN THE PAVEMENT/ROADWAY.

'S.O.M.' - DENOTES SIZE OF MAIN.
'F' - DENOTES NOMINAL PIPE DIAMETER OF FIRE LINE.
'D' - DENOTES NOMINAL PIPE DIAMETER OF DOMESTIC LINE.
✱ MAY SUBTITUTE 'F' x 'F' x 'F' DUCTILE IRON CLASS 350 CEMENT LINED RETAINED MECHANICAL JOINT TEE AND 'F' x 'D' DUCTILE IRON CLASS 350 CEMENT LINED RETAINED MECHANICAL JOINT PLAIN END x PLAIN END REDUCER FOR ITEM (3).

✱✱ METERS IN VAULTS MUST BE ABLE TO BE READ FROM ABOVE WITHOUT ENTRY. IF NO CLEAR LINE OF SITE TO THE METER CAN BE ACHIEVED BY PLACEMENT OF THE ACCESS MANHOLE, AS DETERMINED BY THE DIVISION OF WATER, A 12" DIAMETER VIEWING PORT MUST BE PROVIDED THAT IS CENTERED OVER THE METER FOR READING PURPOSES IN ADDITION TO THE MANHOLE NEEDED FOR ACCESS. CONTRACTOR MAY ORDER PRECAST MANHOLE WITH VIEWING PORT OPENING OR CORE OPENING ONSITE. ALL TRAFFIC BEARING AND NON-TRAFFIC BEARING VAULTS MUST MAINTAIN THEIR DESIGNED STRUCTURAL INTEGRITY AND CASTING SHALL BE SECURE FOR ROAD TRAFFIC. CONTRACTOR IS REQUIRED TO CALL THE PERMITS AND SALES UNIT OF THE DIVISION OF WATER AT 216-664-2444 EXT. 5206 FOR INSPECTION OF ANY VAULT SET.

STANDARD DETAILS
DEPARTMENT OF PUBLIC UTILITIES
DIVISION OF WATER
CLEVELAND, OHIO
SUBJECT SINGLE FEED/SEPARATE VAULTS
DOMESTIC - FIRELINE CONNECTION
4"-12" DOMESTIC/4"-12" FIRELINE
DRAWN BY RSK -SCALE- NONE
DATE 2-25-2009
CHECKED BY DATE
STD-V04

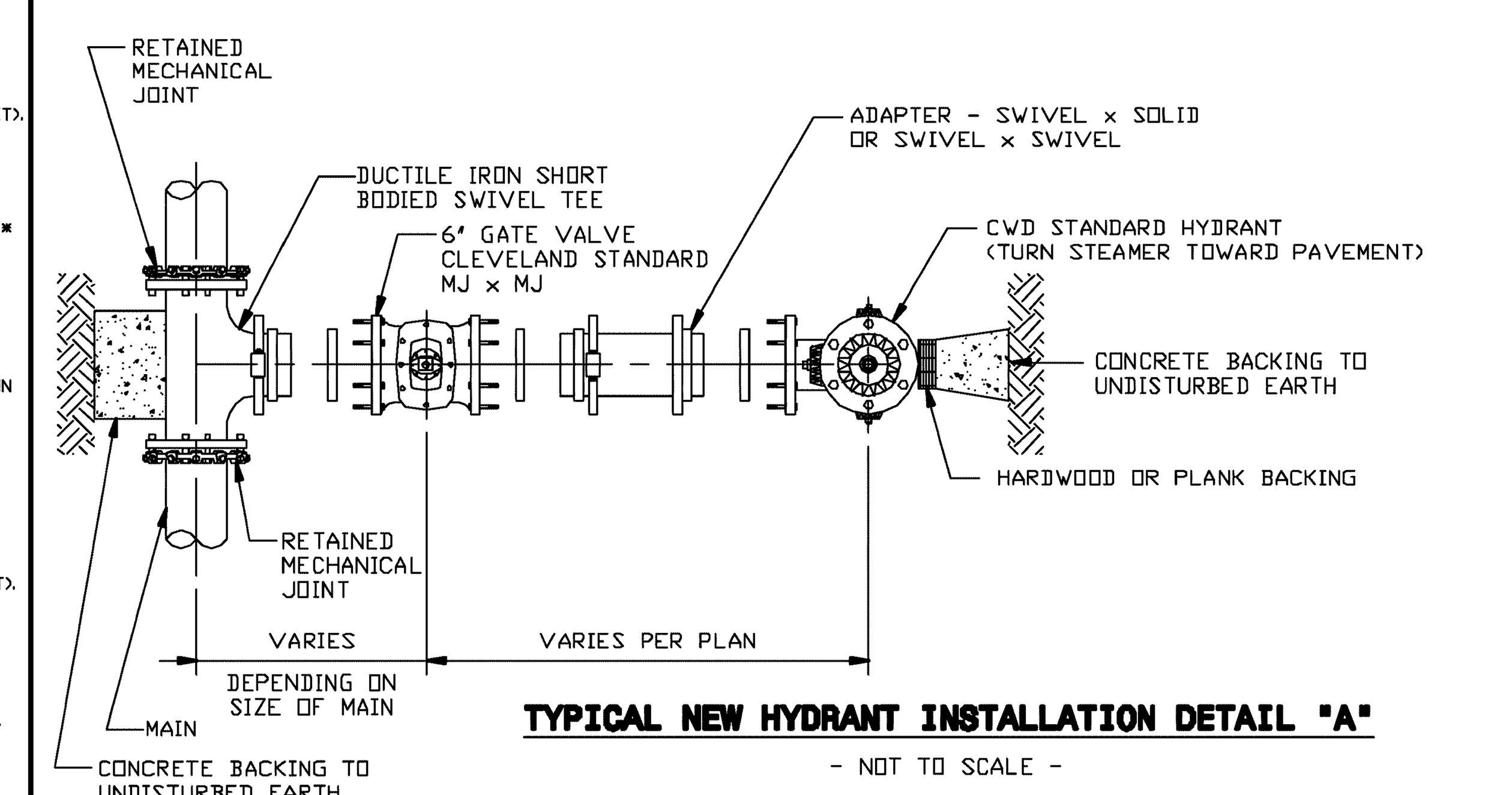

TYPICAL NEW HYDRANT INSTALLATION DETAIL "A"

- NOT TO SCALE -

NOTE: IN LIEU OF SWIVEL BRANCH TEES AND ADAPTERS CONTRACTORS MAY FURNISH HYDRANT BRANCHES HAVING RETAINED MECHANICAL JOINTS INCLUDING HYDRANT SHOE. ALL MECHANICAL JOINTS SHALL HAVE FIELD APPLIED ONE (1) COAT OF BITUMASTIC PAINT. ALL MECHANICAL JOINTS SHALL BE POLYETHYLENE WRAPPED IN ACCORDANCE WITH AWWA C-1-5/A21.5-88 CLASS "C" METHOD "B".

ALL BOLTS AND NUTS FURNISHED WITH RETAINED MECHANICAL JOINTS INCLUDING RETAINER OR WEDGE ACTION TYPE GLANDS SHALL BE COPPER-BEARING DUCTILE IRON, OR EQUIVALENT HIGH STRENGTH, LOW ALLOY CORROSION RESISTANT STEEL.

STD-H09 DATE: 3-4-2002 BY: RSK

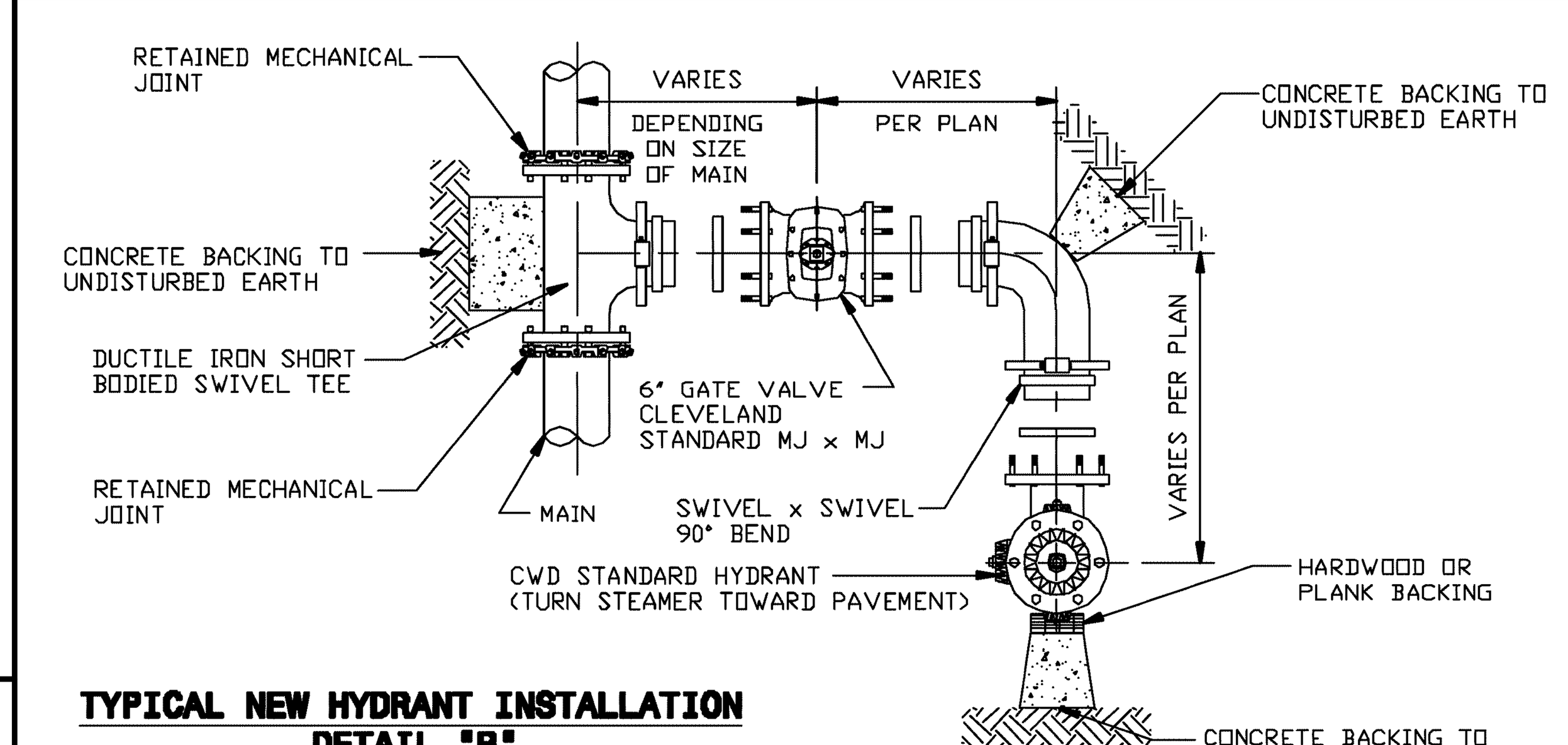

TYPICAL NEW HYDRANT INSTALLATION DETAIL "B"

- NOT TO SCALE -

NOTE: IN LIEU OF SWIVEL BRANCH TEES AND ADAPTERS CONTRACTORS MAY FURNISH HYDRANT BRANCHES HAVING RETAINED MECHANICAL JOINTS INCLUDING HYDRANT SHOE. ALL MECHANICAL JOINTS SHALL HAVE FIELD APPLIED ONE (1) COAT OF BITUMASTIC PAINT. ALL MECHANICAL JOINTS SHALL BE POLYETHYLENE WRAPPED IN ACCORDANCE WITH AWWA C-1-5/A21.5-88 CLASS "C" METHOD "B".

ALL BOLTS AND NUTS FURNISHED WITH RETAINED MECHANICAL JOINTS INCLUDING RETAINER OR WEDGE ACTION TYPE GLANDS SHALL BE COPPER-BEARING DUCTILE IRON, OR EQUIVALENT HIGH STRENGTH, LOW ALLOY CORROSION RESISTANT STEEL.

STD-H10 DATE: 10-1-97 BY: RSK

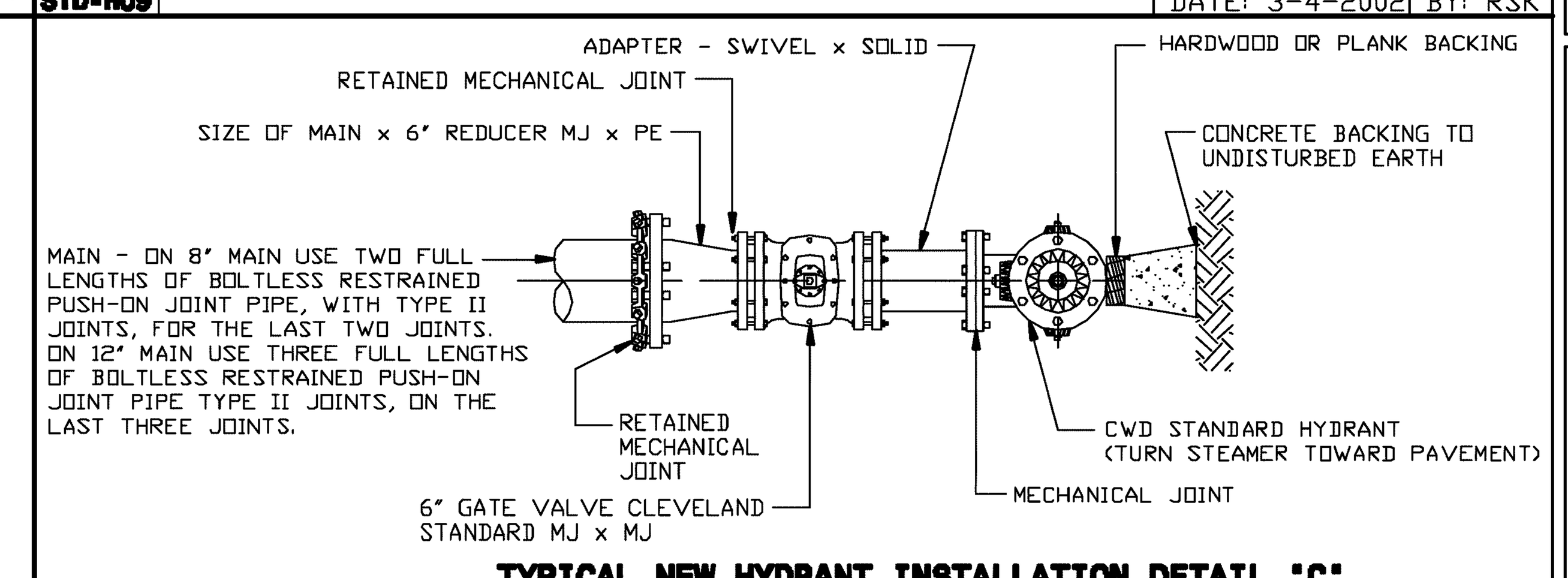

TYPICAL NEW HYDRANT INSTALLATION DETAIL "C"

NOT TO SCALE

NOTE: IN LIEU OF SWIVEL BRANCH TEES AND ADAPTERS CONTRACTORS MAY FURNISH HYDRANT BRANCHES HAVING RETAINED MECHANICAL JOINTS INCLUDING HYDRANT SHOE. ALL MECHANICAL JOINTS SHALL HAVE FIELD APPLIED ONE (1) COAT OF BITUMASTIC PAINT. ALL MECHANICAL JOINTS SHALL BE POLYETHYLENE WRAPPED IN ACCORDANCE WITH AWWA C-1-5/A21.5-88 CLASS "C" METHOD "B".

ALL BOLTS AND NUTS FURNISHED WITH RETAINED MECHANICAL JOINTS INCLUDING RETAINER OR WEDGE ACTION TYPE GLANDS SHALL BE COPPER-BEARING DUCTILE IRON, OR EQUIVALENT HIGH STRENGTH, LOW ALLOY CORROSION RESISTANT STEEL.

STD-H11 DATE: 3-4-2002 BY: RSK

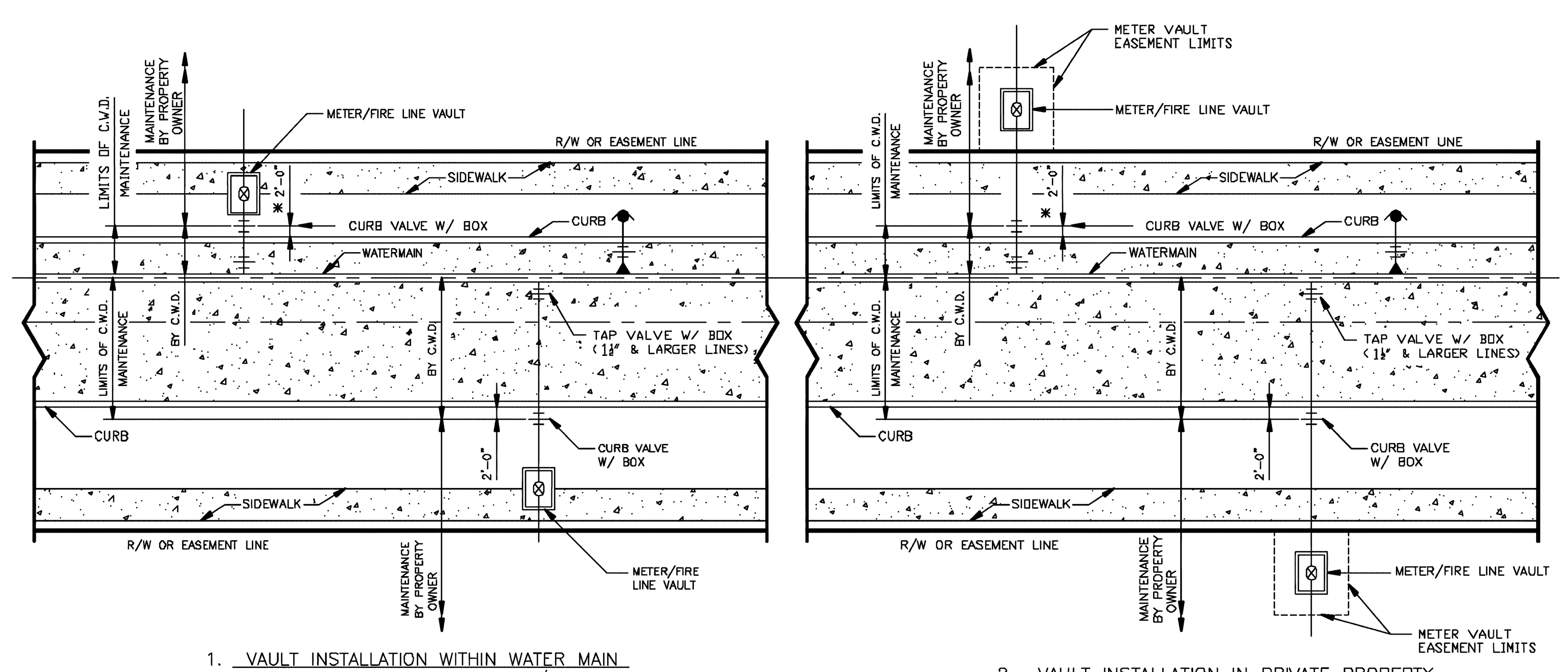

1. VAULT INSTALLATION WITHIN WATER MAIN EASEMENT OR DEDICATED R/W

2. VAULT INSTALLATION IN PRIVATE PROPERTY

VAULT AND CURB VALVE ARRANGEMENT

1. ALL DOMESTIC SERVICE CONNECTIONS (THAT IS ALL CONNECTIONS USED FOR DRINKING, SANITATION OR IRRIGATION PURPOSES) UTILIZING A VAULT FOR THE PLACEMENT OF THE METER SHALL MATCH ONE OF THE TWO STANDARD DRAWINGS ABOVE.
2. IF ONLY THE BACKFLOW PREVENTION DEVICE FOR THE FIRE SERVICE CONNECTION IS TO BE PLACED IN A VAULT (THAT IS THE DOMESTIC SERVICE CONNECTION WILL BE METERED INSIDE THE BUILDING WITH A REMOTE REGISTER), THEN THAT VAULT MAY BE PLACED AS SHOWN IN DRAWING No. 2 ABOVE AND A METER VAULT EASEMENT WILL NOT BE REQUIRED.
3. SINGLE FAMILY RESIDENTIAL DOMESTIC SERVICE CONNECTIONS IN EASEMENTS, WITHOUT METERVAULTS, SHALL HAVE THE CURB VALVE PLACED NO MORE THAN FIVE (5) FEET FROM THE MAIN. THE CURB VALVE WILL STILL MARK THE CHANGE IN RESPONSIBILITY FOR MAINTENANCE.
4. VAULT AND VAULT COVERS SHALL BE PLACED OUTSIDE OF SIDEWALKS AND DRIVEWAYS WHEN POSSIBLE. VAULT COVERS IN PAVEMENT SHALL BE FLUSH TO THE SURFACE.

✱ 5. IN THE CASE WHEN THE WATERMAIN IS IN THE TREE LAWN IN A DEDICATED RIGHT OF WAY, NOT UNDER THE PAVEMENT, THE SHORT SIDE SHALL HAVE THE CURB VALVE 3'-0" FROM THE WATERMAIN.

REVISIONS No. DATE BY
STANDARD DETAILS
DEPARTMENT OF PUBLIC UTILITIES
DIVISION OF WATER
CLEVELAND, OHIO
SUBJECT VAULT AND VALVE ARRANGEMENT
DRAWN BY RSK -SCALE- NONE
DATE 10-1-97
CHECKED BY MJS DATE 10-1-97
STD-V01

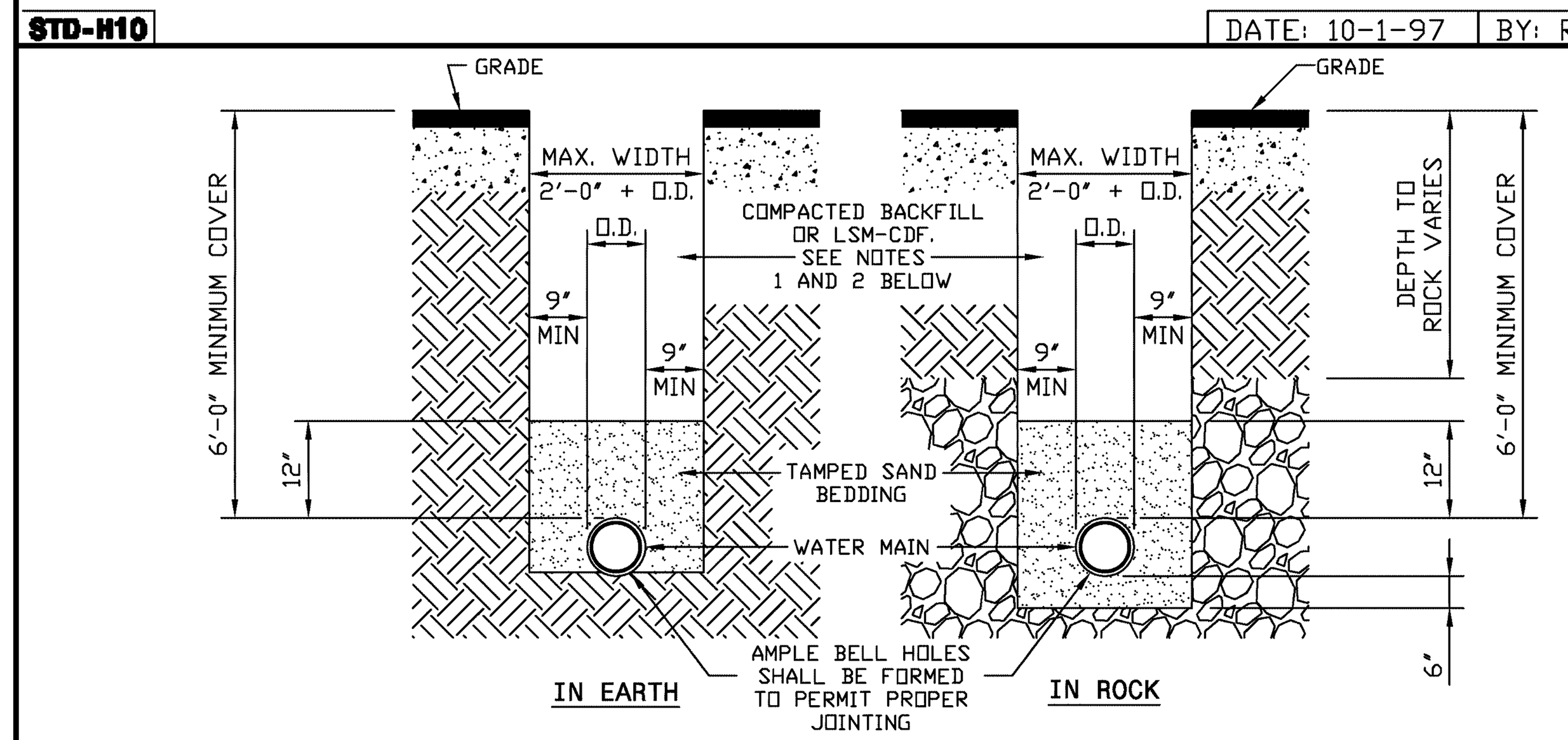

WATER MAIN TRENCH DETAILS

- NOT TO SCALE -

NOTES:
1) PREMIUM BACKFILL CONSISTING OF LOW STRENGTH MORTAR - CONTROLLED DENSITY FILL (LSM-CDF) "FLOWABLE FILL" IS REQUIRED:
A) UNDER ALL EXISTING OR FUTURE PAVEMENTS, SIDEWALKS AND DRIVES WITHIN THE CITY OF CLEVELAND CORPORATION LIMITS.
B) AS SPECIFIED IN LOCAL MUNICIPALITIES SERVED BY CWD (SEE LOCAL REQUIREMENTS)
2) WHEN PREMIUM BACKFILL IS REQUIRED BY THE LOCAL MUNICIPALITY FOR CASES OTHER THAN THOSE LISTED IN NOTE 1 ABOVE, IT SHALL BE LIMESTONE GRADED PER ODOT 304.02 OR ODOT 411. NO SLAG IS PERMITTED.
3) CONTRACTOR SHALL USE SPECIAL CARE IN PLACING THE SAND BEDDING, SO AS TO AVOID SCRAPING OF THE EXTERIOR COATING, INJURING THE PIPE, DISTORTING OR MOVING THE PIPE WHEN COMPACTING THE SAME. THE SAND BEDDING SHALL BE TAMPED IN SIX (6) INCH LAYERS, SIMULTANEOUSLY ON EACH SIDE OF THE PIPE, AND THOROUGHLY COMPACTED SO AS TO PROVIDE A SOLID BACKING AGAINST THE EXTERNAL SURFACE OF THE PIPE.
4) MINIMUM COMPACTION FOR ALL SAND BEDDING, BACKFILL AND PREMIUM BACKFILL SHALL BE 95% STANDARD PROCTOR.
5) PAVEMENT, SIDEWALK OR DRIVES TO BE INSTALLED IN ACCORDANCE WITH LOCAL MUNICIPALITY'S SPECIFICATIONS.

STD-001 DATE: 6-21-2012

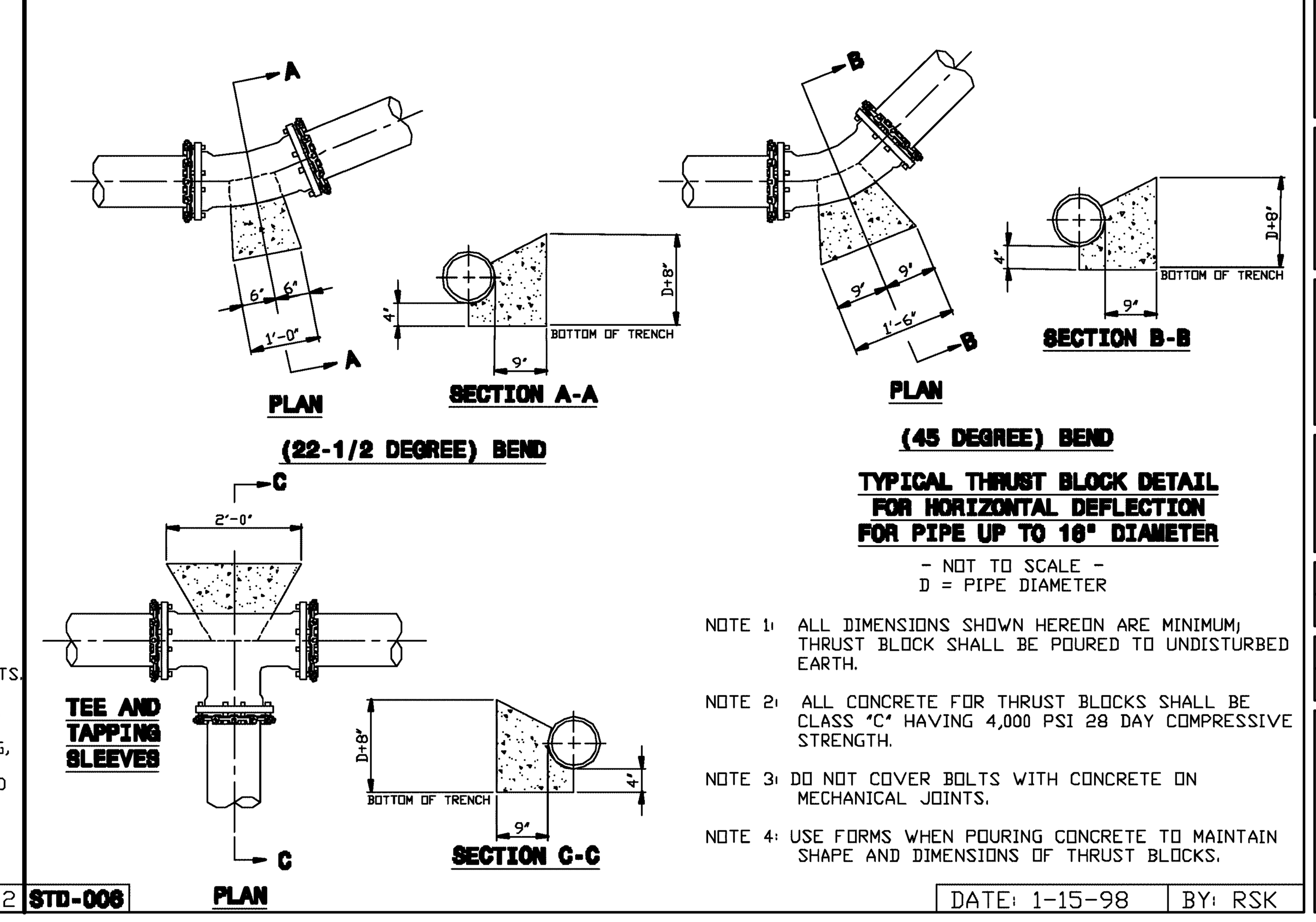

TYPICAL THRUST BLOCK DETAIL FOR HORIZONTAL DEFLECTION FOR PIPE UP TO 16" DIAMETER

- NOT TO SCALE -
D = PIPE DIAMETER

NOTE 1: ALL DIMENSIONS SHOWN HEREON ARE MINIMUM; THRUST BLOCK SHALL BE POURED TO UNDISTURBED EARTH.

NOTE 2: ALL CONCRETE FOR THRUST BLOCKS SHALL BE CLASS "C" HAVING 4,000 PSI 28 DAY COMPRESSIVE STRENGTH.

NOTE 3: DO NOT COVER BOLTS WITH CONCRETE ON MECHANICAL JOINTS.

NOTE 4: USE FORMS WHEN POURING CONCRETE TO MAINTAIN SHAPE AND DIMENSIONS OF THRUST BLOCKS.

STD-006 DATE: 1-15-98 BY: RSK

Code Consultant
PHILIP R. SHERMAN, P.E.
P.O. BOX 216
ELKINS, NH 03233-0216
603-526-6190

Kitchen Consultant
RICCA DESIGN STUDIOS
515 WASHINGTON STREET
NORWELL, MA 02061
303-621-6327

Landscape Architect
STEPHEN STIMSON ASSOCIATES
15 DEPOT AVENUE
FALMOUTH, MA 02540
508-548-8119

Civil Engineer
DONALD G. BOHNING & ASSOCIATES
7979 PUB PARKWAY
VALLEY VIEW, OH 44125
216-642-1130

Mechanical, Electrical, & Plumbing Engineer
KARPINSKI ENGINEERING
3135 EUCLID AVENUE
CLEVELAND, OH 44115
216-391-3700

Structural Engineer
GILSANZ MURRAY STEFICEK, LLP
129 WEST 27TH STREET
NEW YORK, NY 10001
212-254-0030

CENTERBROOK
Architects and Planners, LLP
67 Main Street
Post Office Box 955
Centerbrook, Connecticut 06409-0955
Telephone 860.767.0175
Facsimile 860.767.8719

STATE OF OHIO
DONALD M. WISE
E-61631
REGISTERED PROFESSIONAL ENGINEER

**THE PARK SYNAGOGUE
27500 SHAKER BOULEVARD
PEPPER PIKE, OHIO 44124**

ISSUED:

No Name Date

PHASE:
SITE DEVELOPMENT PLAN APPROVAL

DRAWING NAME:
DETAILS

JOB #: 1721 (DGB#3406-8)

© 2021 CENTERBROOK ARCHITECTS AND PLANNERS

DRAWN BY: TM	DATE: 06/30/2021
CHECKED BY: EK	SCALE: AS NOTED

SHEET:
C8.01

M:\cdcadd\p\3000-3499\3406-8\dwg\340608 C8.0.dwg 6/18/2021 - 1:11pm

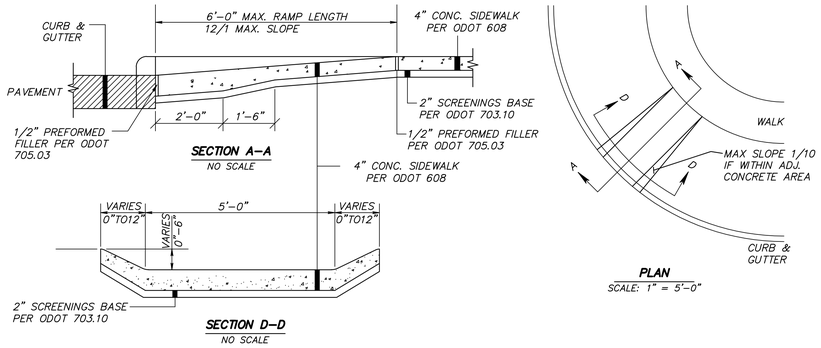

SECTION A–A
NO SCALE

SECTION D–D
NO SCALE

PLAN
SCALE: 1" = 5'-0"

CURB RAMP DETAIL
NO SCALE

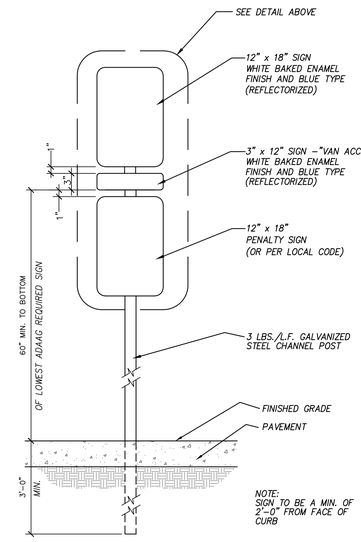

HANDICAPPED PARKING SIGN
NOT TO SCALE

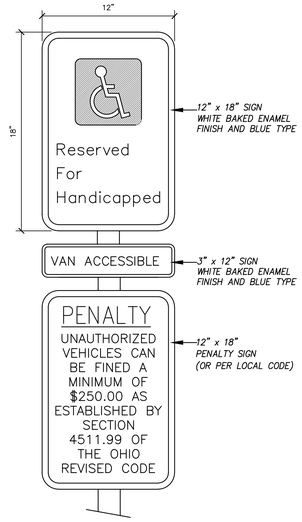

HANDICAPPED PARKING SIGN DETAIL
NOT TO SCALE

- ONE IN EVERY EIGHT, BUT NOT LESS THAN ONE SPACE IS REQUIRED TO BE VAN ACCESSIBLE WITH AN 8'–0" (MIN) WIDE ACCESS AISLE AND A "VAN ACCESSIBLE" SIGN
- REFER TO SITE PLAN FOR LOCATION AND NUMBER OF STALLS REQUIRED
- ADJUST FOR 45°, 60°, AND 75° ANGLED PARKING

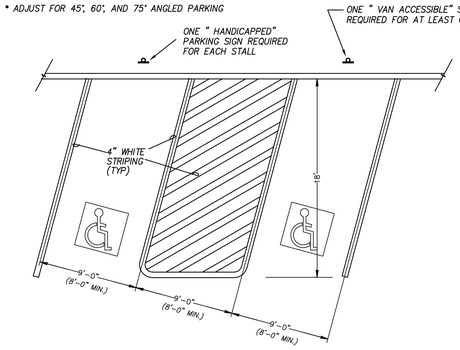

HANDICAPPED STALL MARKING
SCALE: 3/16" = 1'–0"

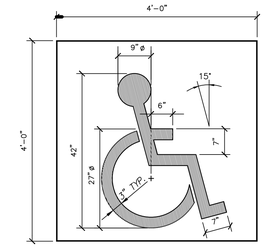

INTERNATIONAL SYMBOL OF ACCESSIBILITY PER ANSI A117.1–1986 REQUIREMENTS

NOTE:
1. USE PAINT WHICH CONTRASTS WITH BACKGROUND
2. THIS SIGN TO BE FURNISHED AND INSTALLED BY G.C.

PAINTED HANDICAPPED PARKING SYMBOL
NOT TO SCALE

NOTES:
1. CONSTRUCT RAMPS TO MEET REQUIRED SLOPES AND EXISTING CONDITIONS
2. TEXTURE OF CONCRETE SURFACES SHALL BE OBTAINED BY COARSE BROOMING TRANSVERSE TO THE RAMP SLOPES AND SHALL BE ROUGHER THEN THE ADJACENT WALK

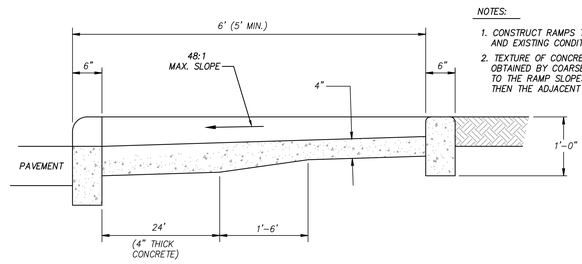

SECTION "A"–"A"
SCALE: 1" = 1'–0"

NOTE:
1. ALL H/C PARKING AREAS MUST HAVE A 1:50 (2%) SLOPE MAX. IN ALL DIRECTIONS
2. ACCESS ROUTES MUST HAVE A 1:20 (5%) RUNNING SLOPE MAX. & A 1:50 (2%) CROSS SLOPE MAX.

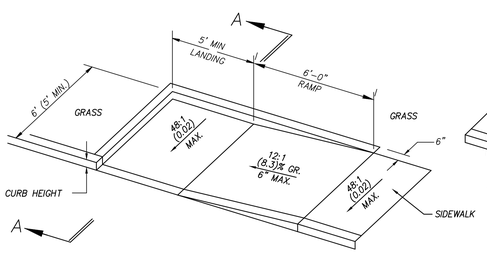

PARALLEL CURB RAMP DETAIL (SINGLE)
SCALE: 1/4" = 1'–0"

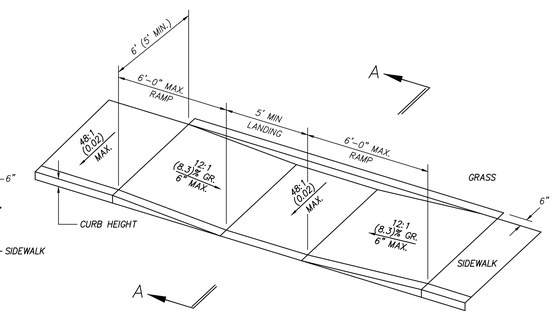

PARALLEL CURB RAMP DETAIL (DOUBLE)
SCALE: 1/4" = 1'–0"

Code Consultant
PHILIP R. SHERMAN, P.E.
P.O. BOX 216
ELKINS, NH 03233-0216
603-526-6190

Kitchen Consultant
RICCA DESIGN STUDIOS
515 WASHINGTON STREET
NORWELL, MA 02061
303-621-6327

Landscape Architect
STEPHEN STIMSON ASSOCIATES
15 DEPOT AVENUE
FALMOUTH, MA 02540
508-548-8119

Civil Engineer
DONALD G. BOHNING & ASSOCIATES
7979 PUB PARKWAY
VALLEY VIEW, OH 44125
216-642-1130

Mechanical, Electrical, & Plumbing Engineer
KARPINSKI ENGINEERING
3135 EUCLID AVENUE
CLEVELAND, OH 44115
216-391-3700

Structural Engineer
GILSANZ MURRAY STEFICEK, LLP
129 WEST 27TH STREET
NEW YORK, NY 10001
212-254-0030

CENTERBROOK
Architects and Planners, LLP
67 Main Street
Post Office Box 955
Centerbrook, Connecticut 06409-0955
Telephone 860.767.0175
Facsimile 860.767.8719

STATE OF OHIO · DONALD G. WISE · E-61631 · REGISTERED PROFESSIONAL ENGINEER

THE PARK SYNAGOGUE
27500 SHAKER BOULEVARD
PEPPER PIKE, OHIO 44124

ISSUED:

No	Name	Date

PHASE:
SITE DEVELOPMENT PLAN APPROVAL

DRAWING NAME:
DETAILS

JOB #: 1721 (DGB#3406-8)

© 2021 CENTERBROOK ARCHITECTS AND PLANNERS

DRAWN BY: TM | DATE: 06/30/2021
CHECKED BY: EK | SCALE: AS NOTED

SHEET:
C8.02

w:\projects\p\3000-3499\3406-8\dwg\3406c8 C8.0.dwg 6/18/2021 - 1:12pm

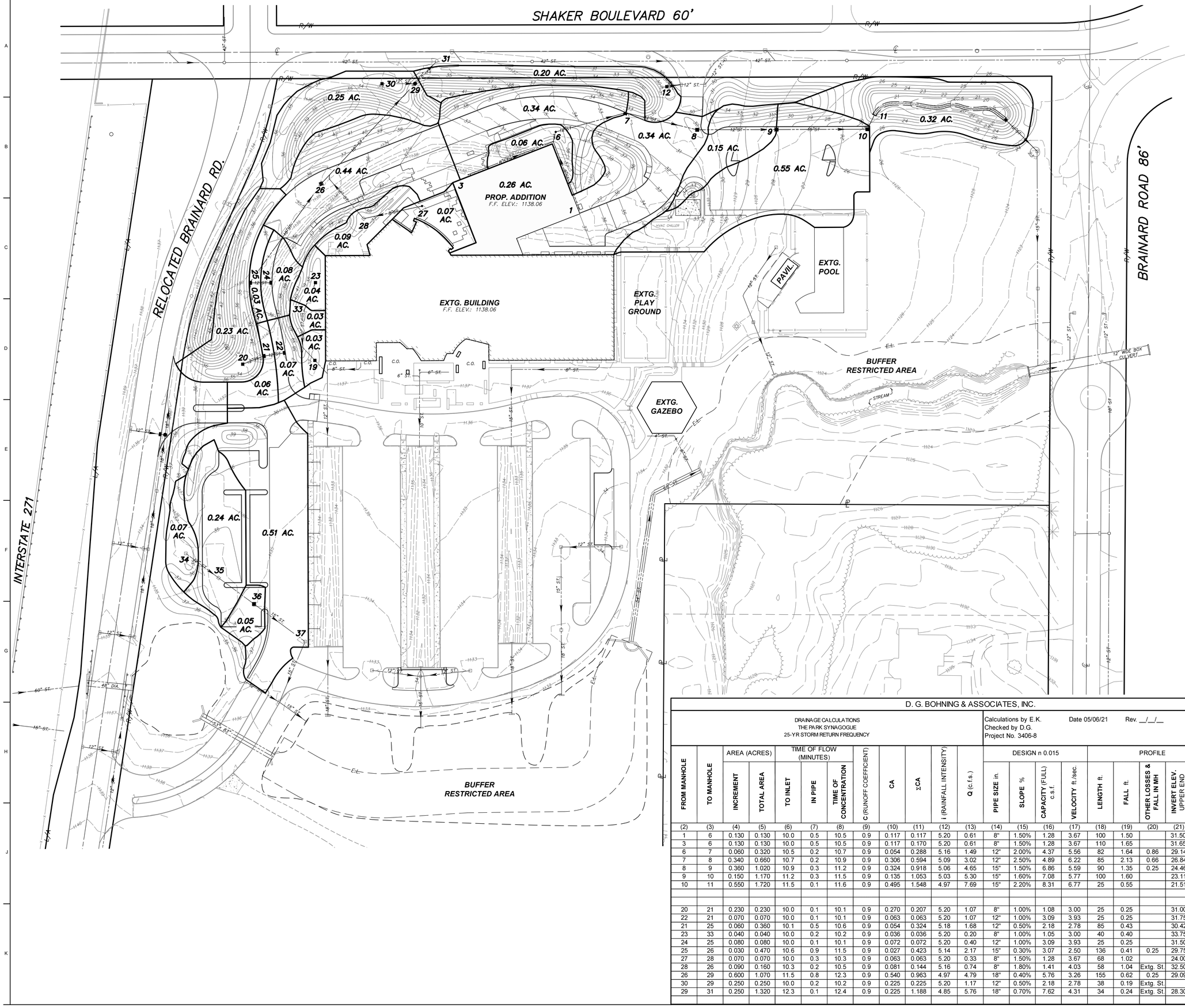

D. G. BOHNING & ASSOCIATES, INC.

DRAINAGE CALCULATIONS
THE PARK SYNAGOGUE
25-YR STORM RETURN FREQUENCY

Calculations by E.K. Date 05/06/21 Rev. __/__/__
Checked by D.G.
Project No. 3406-8

FROM MANHOLE	TO MANHOLE	AREA (ACRES) INCREMENT	AREA (ACRES) TOTAL AREA	TIME OF FLOW (MINUTES) TO INLET	TIME OF FLOW (MINUTES) IN PIPE	TIME OF FLOW (MINUTES) TIME OF CONCENTRATION	C (RUNOFF COEFFICIENT)	CA	ΣCA	i (RAINFALL INTENSITY)	Q (c.f.s.)	DESIGN n 0.015 PIPE SIZE in.	SLOPE %	CAPACITY (FULL) c.s.f.	VELOCITY ft./sec.	PROFILE LENGTH ft.	FALL ft.	OTHER LOSSES & FALL IN MH	INVERT ELEV. UPPER END	INVERT ELEV. LOWER END	TOP OF CASTING ELEV.	DEPTH (T.C.-INV.)
(2)	(3)	(4)	(5)	(6)	(7)	(8)	(9)	(10)	(11)	(12)	(13)	(14)	(15)	(16)	(17)	(18)	(19)	(20)	(21)	(22)	(23)	(24)
1	6	0.130	0.130	10.0	0.5	10.5	0.9	0.117	0.117	5.20	0.61	8"	1.50%	1.28	3.67	100	1.50		31.50	30.00		
3	6	0.130	0.130	10.0	0.5	10.5	0.9	0.117	0.170	5.20	0.61	8"	1.50%	1.28	3.67	110	1.65		31.65	30.00		
6	7	0.060	0.320	10.5	0.2	10.7	0.9	0.054	0.288	5.16	1.49	12"	2.00%	4.37	5.56	82	1.64	0.86	29.14	27.50	35.00	
7	8	0.340	0.660	10.7	0.2	10.9	0.9	0.306	0.594	5.09	3.02	12"	2.50%	4.89	6.22	85	2.13	0.66	26.84	24.71	32.10	
8	9	0.360	1.020	10.9	0.3	11.2	0.9	0.324	0.918	5.06	4.65	15"	1.50%	6.86	5.59	90	1.35	0.25	24.46	23.11	29.66	
9	10	0.150	1.170	11.2	0.3	11.5	0.9	0.135	1.053	5.03	5.30	15"	1.60%	7.08	5.77	100	1.60		23.11	21.51	27.90	
10	11	0.550	1.720	11.5	0.1	11.6	0.9	0.495	1.548	4.97	7.69	15"	2.20%	8.31	6.77	25	0.55		21.51	20.96	25.25	
20	21	0.230	0.230	10.0	0.1	10.1	0.9	0.270	0.207	5.20	1.07	8"	1.00%	1.08	3.00	25	0.25		31.00	30.75	33.50	
22	21	0.070	0.070	10.0	0.1	10.1	0.9	0.063	0.063	5.20	1.07	12"	1.00%	3.09	3.93	25	0.25		31.75	31.50	35.25	
21	25	0.060	0.360	10.1	0.5	10.6	0.9	0.054	0.324	5.18	1.68	12"	0.50%	2.18	2.78	85	0.43		30.42	30.00	35.00	
23	33	0.040	0.040	10.0	0.2	10.2	0.9	0.036	0.036	5.20	0.20	8"	1.00%	1.05	3.00	40	0.40		33.75	33.35	36.25	
24	25	0.080	0.080	10.0	0.1	10.1	0.9	0.072	0.072	5.20	0.40	12"	1.00%	3.09	3.93	25	0.25		31.50	31.25	35.00	
25	26	0.030	0.470	10.6	0.9	11.5	0.9	0.027	0.423	5.14	2.17	15"	0.30%	3.07	2.50	136	0.41	0.25	29.75	29.34	35.00	
27	28	0.070	0.070	10.0	0.3	10.3	0.9	0.063	0.063	5.20	0.33	8"	1.50%	1.28	3.67	68	1.02		24.00	32.98	37.35	
28	26	0.090	0.160	10.3	0.2	10.5	0.9	0.081	0.144	5.16	0.74	8"	1.80%	1.41	4.03	58	1.04	Extg. St.	32.50	31.40	36.00	
26	29	0.600	1.070	11.5	0.8	12.3	0.9	0.540	0.963	4.97	4.79	18"	0.40%	5.76	3.26	155	0.62	0.25	29.09	28.47	36.50	
30	29	0.250	0.250	10.0	0.2	10.2	0.9	0.225	0.225	5.20	1.17	12"	0.50%	2.18	2.78	38	0.19	Extg. St.				
29	31	0.250	1.320	12.3	0.1	12.4	0.9	0.225	1.188	4.85	5.76	18"	0.70%	7.62	4.31	34	0.24	Extg. St.	28.30	28.00	32.20	

Code Consultant
PHILIP R. SHERMAN, P.E.
P.O. BOX 216
ELKINS, NH 03233-0216
603-526-6190

Kitchen Consultant
RICCA DESIGN STUDIOS
515 WASHINGTON STREET
NORWELL, MA 02061
303-421-6327

Landscape Architect
STEPHEN STIMSON ASSOCIATES
15 DEPOT AVENUE
FALMOUTH, MA 02540
508-548-8119

Civil Engineer
DONALD G. BOHNING & ASSOCIATES
7979 PUB PARKWAY
VALLEY VIEW, OH 44125
216-642-1130

Mechanical, Electrical, & Plumbing Engineer
KARPINSKI ENGINEERING
3135 EUCLID AVENUE
CLEVELAND, OH 44115
216-391-3700

Structural Engineer
GILSANZ MURRAY STEFICEK, LLP
129 WEST 27TH STREET
NEW YORK, NY 10001
212-254-0030

CENTERBROOK
Architects and Planners, LLP
67 Main Street
Post Office Box 955
Centerbrook, Connecticut 06409-0955
Telephone 860.767.0175
Facsimile 860.767.8719

STATE OF OHIO · DONALD G. BOHNING · WISE · E-61631 · REGISTERED · PROFESSIONAL ENGINEER

THE PARK SYNAGOGUE 27500 SHAKER BOULEVARD PEPPER PIKE, OHIO 44124

ISSUED:

No	Name	Date

PHASE:
SITE DEVELOPMENT PLAN APPROVAL

DRAWING NAME:
DRAINAGE AREA MAP & STORM SEWER CALC.

JOB #: 1721 (DGB#3406-8)

© 2021 CENTERBROOK ARCHITECTS AND PLANNERS

DRAWN BY: TM DATE: 06/30/2021
CHECKED BY: EK SCALE: AS NOTED

SHEET:
C9.00

M:\projects\p\3500--3499\3406-8\dwg\3406DR 03.0.dwg 6/18/2021 - 11:19am

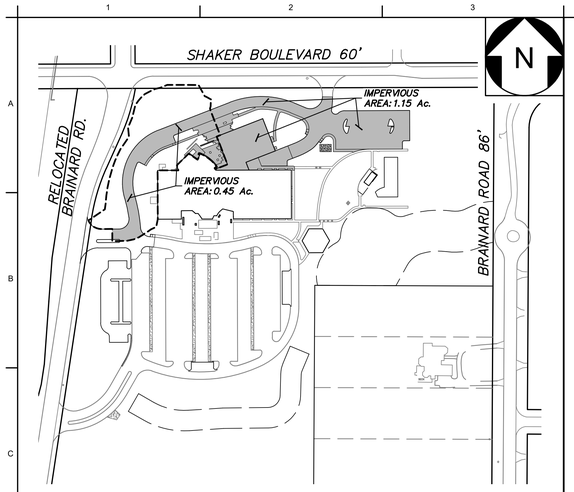

PROPOSED IMPERVIOUS AREAS

SCALE: 1" = 150'

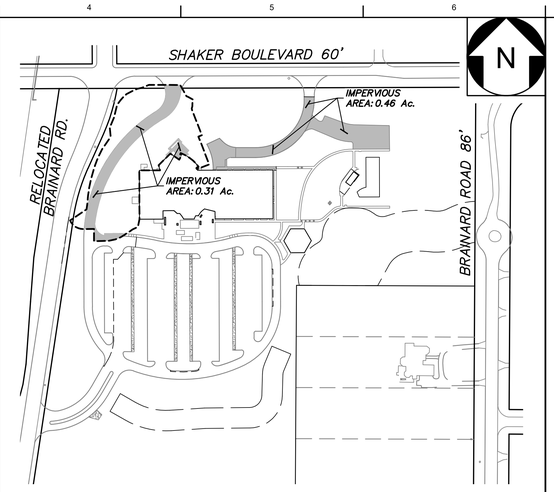

EXISTING IMPERVIOUS AREAS

SCALE: 1" = 150'

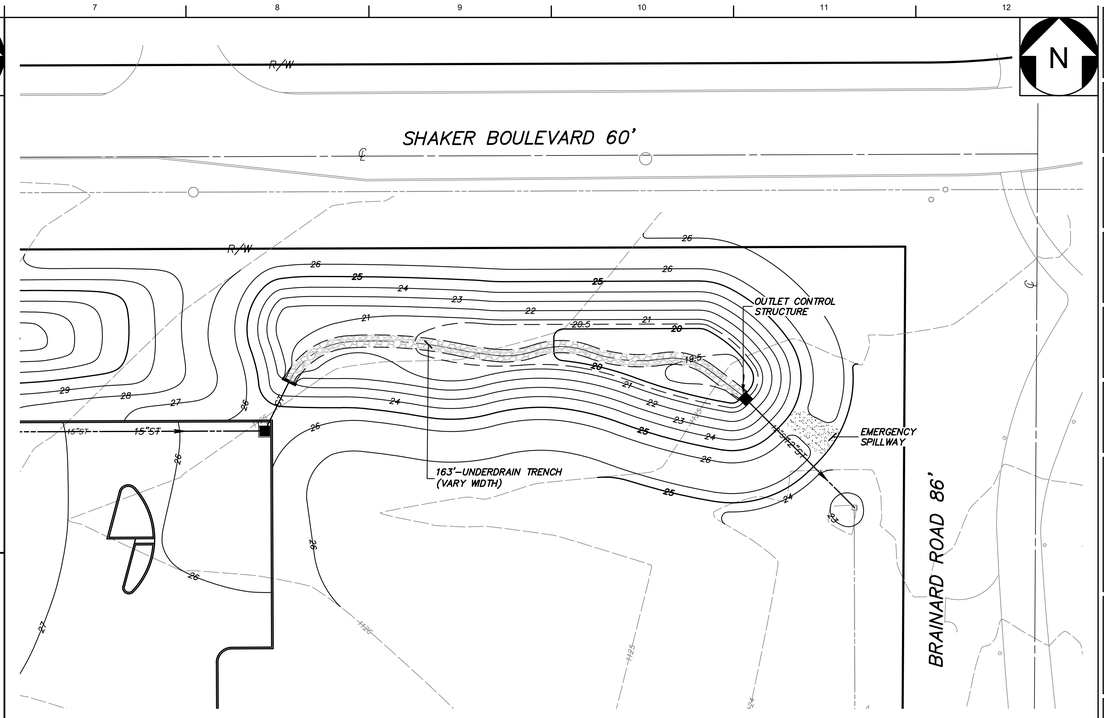

PROPOSED STORMWATER MANAGEMENT BASIN

SCALE: 1" = 20'

POST-CONSTRUCTION STORMWATER MANAGEMENT CALCULATIONS

Project: The Park Synagogue
City of Pepper Pike, Ohio

Discussion:

For the proposed project, a dry extended detention pond was chosen as the post-construction storm water treatment BMPs. The selection of dry extended detention for the other facility was also driven by aesthetic / landscaping / maintenance considerations.

Conclusion:

The following calculations indicate that, for the proposed extended detention pond, the post-construction storm water treatment is sized to meet the design requirements of the Ohio EPA's NPDES Permit and the guidelines listed in the Ohio Rainwater and Land Development Manual (2006).

Stormwater Quality / Detention Pond 1 (Dry Extended Detention):

Total Drainage Area [A] = 2.03 acres
Total Impervious Area to Pond 1 = 1.17 acres
Fraction of Post Construction Impervious Surface [i] = 0.576
Water Quality Storm Intensity [P] = 0.90 inch in 24 hours (per NPDES Permit)

Determination of Water Quality Volume
Rv = 0.05 + 0.9i = (0.05 + 0.9 x 0.576) = 0.5687
WQ_V = Rv x P x A / 12 = (0.5687 x 0.9 x 2.03 / 12) = 0.0866 acre-foot
= 3,772 cubic feet

Per NPDES Permit requirements for a dry extended detention basin:
Minimum Permanent Pool Volume = WQv x 0.20 = 754 cubic feet
Required Extended Detention Volume = WQ_V = 3,772 cubic feet

Permanent Pool Volume Provided

Aggregate-Filled Trench w/Underdrain (40% void ratio):
(4.0' Wide x 3.0' Average Depth x 163' Long) x 0.40 = (1,956 C.F.) x 0.40
= **782.4 C.F.** (> 754 C.F. ✓)

Extended Detention Volume Provided

Elevation	Area (S.F.)	Δ Volume (C.F.)	Σ Volume (C.F.)
1119	0	---	---
1119.50	346	87	87
1120	940	322	409
1120.50	1,445	596	1,005
1121	2,456	975	1,980
1122	4,026	3,241	5,221
1123	5,054	4,540	9,761
1124	6,363	5,709	15,470
1125	7,838	7,101	22,571

Extended Detention Elevation (Elevation at Σ Volume = 3,772 C.F.) = **1121.55**

Calculation of Drawdown Time

Minimum drawdown time [T] = 48 hours for a dry extended detention pond
(to drawdown from the ED elevation of 1121.55 to the pond normal water elevation of 1119.00)
Maximum Q_{avg} = 3,772 c.f. / 172,800 sec = 0.0218 cfs
Assume Q_{avg} = ½ Q_{max}

For 7/8" (0.875") Diameter outlet orifice (A = 0.0042 sq. ft., bottom of orifice elevation = 1119.04):
At Elev. = 1121.55, H= 2.51'
Q_{max} = 0.61 x 0.0042 sq. ft. x $\sqrt{}$ (64.4 x 2.51 ft.)
= 0.0326 cfs
Q_{avg} = 0.0163 cfs (< Max. Q_{avg} = 0.0218 cfs)

Drawdown time: T = 3,772 c.f. / 0.0163 cfs = 231,411 sec = **64.28 hours** > 48 hours✓

Verify that the upper 50% of the Extended Detention Volume will drain in no less than 1/3 of the required drain time:

50% of WQv = 0.5 x 3,772 c.f. = 1,886 c.f.
1/3 of T = T_{50} = 1/3 x 48 hours = 16 hours
Maximum Q_{avg} = 1,886 c.f. / 57,600 sec. = 0.0327 cfs

50% of WQv (Elevation at Σ Volume = 1,886 c.f.) = 1120.95

At Elev. = 1120.95, H = 1.91'
$Q_{50\%}$ = 0.61 x 0.0042 x $\sqrt{}$ (64.4 x 1.91 ft.)
= 0.0284 cfs
Q_{avg}= (Q_{max}-$Q_{50\%}$)/2 = (0.0326+0.0284)/2 = 0.0305 cfs

Drawdown time: T_{50} = 1,886 c.f. / 0.0305 cfs = 61,836 sec = **17.18 hours** > 16 hours✓

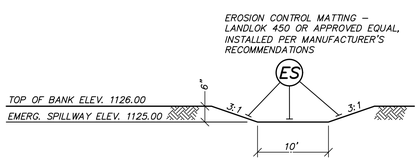

EMERGENCY SPILLWAY TYPICAL SECTION

NO SCALE

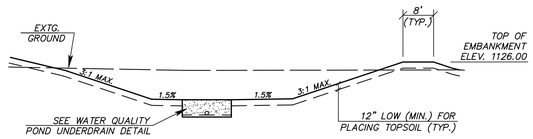

TYPICAL POND SECTION "A–A"

NO SCALE

NOTES:

1. UNDERDRAIN SHALL BE CONSTRUCTED IN ACCORDANCE WITH ODOT ITEM 605. CONDUIT SHALL BE 6" DIAMETER PERFORATED HDPE PIPE PER AASHTO M294 TYPE SP, PVC TYPE PS–46 PIPE CONFORMING TO ASTM F 758, OR PVC PIPE CONFORMING TO ASTM D 3034 SDR 35.
2. DO NOT INSTALL UNDERDRAIN AND AGGREGATE TRENCH UNTIL TEMPORARY SEDIMENT BASIN, RISER PIPE, AND SKIMMER AT POND HAVE BEEN REMOVED.
3. INSTALL TEMPORARY FILTER FABRIC OVER TOP OF AGGREGATE TRENCH TO COLLECT ANY SEDIMENT DURING CONSTRUCTION. ONCE TRIBUTARY AREAS HAVE BEEN STABILIZED, REMOVE TEMPORARY FILTER FABRIC.

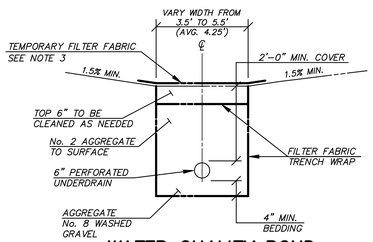

WATER QUALITY POND UNDERDRAIN DETAIL

NO SCALE

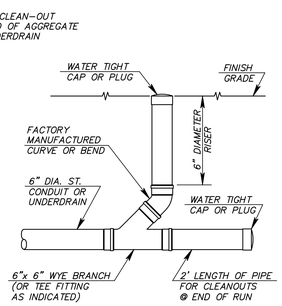

6" STORM CLEANOUT DETAIL

NO SCALE

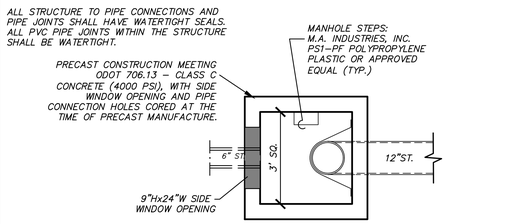

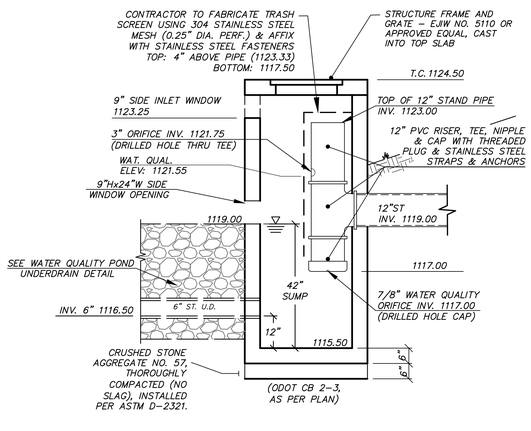

STORM OUTLET CONTROL STRUCTURE

SCALE: 1/2"=1'0"

Code Consultant
PHILIP R. SHERMAN, P.E.
P.O. BOX 216
ELKINS, NH 03233-0216
603-526-6190

Kitchen Consultant
RICCA DESIGN STUDIOS
515 WASHINGTON STREET
NORWELL, MA 02061
303-621-6327

Landscape Architect
STEPHEN STIMSON ASSOCIATES
15 DEPOT AVENUE
FALMOUTH, MA 02540
508-548-8119

Civil Engineer
DONALD G. BOHNING & ASSOCIATES
7979 PUB PARKWAY
VALLEY VIEW, OH 44125
216-642-1130

Mechanical, Electrical, & Plumbing Engineer
KARPINSKI ENGINEERING
3135 EUCLID AVENUE
CLEVELAND, OH 44115
216-391-3700

Structural Engineer
GILSANZ MURRAY STEFICEK, LLP
129 WEST 27TH STREET
NEW YORK, NY 10001
212-254-0030

CENTERBROOK
Architects and Planners, LLP
67 Main Street
Post Office Box 955
Centerbrook, Connecticut 06409-0955
Telephone 860.767.0175
Facsimile 860.767.8719

STATE OF OHIO · RONALD E. WISE · E–61631 · REGISTERED PROFESSIONAL ENGINEER

THE PARK SYNAGOGUE 27500 SHAKER BOULEVARD PEPPER PIKE, OHIO 44124

ISSUED:

No	Name	Date

PHASE:
SITE DEVELOPMENT PLAN APPROVAL

DRAWING NAME:
STORM SEWER CALCS. & DETAILS

JOB #: 1721 (DGB#3406-8)

© 2021 CENTERBROOK ARCHITECTS AND PLANNERS

DRAWN BY: TM | DATE: 06/30/2021
CHECKED BY: EK | SCALE: AS NOTED

SHEET:
C9.01

M:\Jobs\Up\3000-3499\3406-8\dwg\3406d8 C9.0.dwg 6/18/2021 - 1:11pm

SOIL PROTECTION CHART

STABILIZATION TYPE	J	F	M	A	M	J	J	A	S	O	N	D
PERMANENT SEEDING				●	●	*	*	*	●	●		
DORMANT SEEDING	●	●	●								●	●
TEMPORARY SEEDING				●	●	*	*	*	●	●		
SODDING				**	**	**	**	**	**			
MULCHING	●	●	●	●	●	●	●	●	●	●	●	●

* – IRRIGATION NEEDED DURING JUNE THRU AUGUST
** – IRRIGATION NEEDED FOR 2–3 WEEKS AFTER APPLYING SOD
NOTE: DISTURBED AREAS THAT WILL BE IDLE OVER WINTER SHALL HAVE EROSION CONTROLS APPLIED PRIOR TO THE ONSET OF WINTER WEATHER.

PROJECT IMPLEMENTATION SCHEDULE

SYM.	ODOT ITEM	QUANT.	UNITS	DESCRIPTION
1. INITIAL SEDIMENT CONTROL MEASURES				
CRS	703.01	200	TONS	CONST. ROAD STABILIZATION NO. 2 AGGREGATE
SF	207	1,525	L.F.	SILT FENCING (FILTER FABRIC FENCE)
SB	207	2	EA.	SEDIMENTATION BASINS
ST	207	2	EA.	SEDIMENTATION TRAPS
IP	207	6	EA.	INLET PROTECTION (EXTG. INLETS)
D	207	150	L.F.	DRAINAGE WAY ROUTING (DIVERSIONS)
SCD	207	---	EA.	SILTATION CHECK DAM
2. SITE GRADING				
TPS	651	---	Y/N	TOPSOIL STOCKPILE
TS M	207	3	ACRE	TEMPORARY SEEDING & MULCHING
FS	207	---	S.Y.	VEGETATIVE FILTER STRIP
EM	671	---	S.Y.	EROSION CONTROL MAT
3. SITE IMPROVEMENT INSTALLATION –				
IP	207	20	EA.	INLET PROTECTION
IP	207	11	EA.	INLET PROTECTION (AFTER PAVEMENT CONSTRUCTION)
4. FINAL SITE STABILIZATION				
PS M	659	3	ACRE	PERMANENT SEEDING & MULCHING

COMMERCIAL DEVELOPMENT

SITE DESCRIPTION	(TYPE OF CONSTRUCTION)
TOTAL AREA OF SITE	3.65 AC.
AREA TO BE EXCAVATED	3.65 AC.
PRE–DEV. RUNOFF COEFF.	CN=82
POST–DEV. RUNOFF COEFF.	CN=90
IMPERVIOUS AREA	1.6 AC.
% IMPERVIOUS CREATED	44%
KNOWN PRIOR LAND USES:	DEVELOPED

SOIL TYPES:	% OF SITE	% EXCAVATED
URBANIZED	100	100

FOR FULL SOIL TYPE DESCRIPTIONS SEE THE SOIL SURVEY OF CUYAHOGA COUNTY, OHIO (U.S.D.A., S.C.S)

SITE LOCATION INFORMATION:
THE PARK SYNAGOGUE
PROJECT NAME
PEPPER PIKE (VILLAGE) CUYAHOGA (COUNTY) OHIO (STATE) 44124 (ZIP CODE)
LATITUDE 41.4775 LONGITUDE 81.4856
PUBLIC STORM SEWERS/PEPPER PIKE
IMMEDIATE RECEIVING STREAM OR SURFACE WATER(S)

ADJACENT/RECEIVING WETLANDS & AREA (SIZE)

DEVELOPER
THE PARK SYNAGOGUE

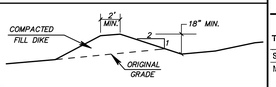

NOTE: DIVERSIONS SHALL BE STABILIZED WITH TEMPORARY SEEDING AND MULCHING AS SOON AS THEY ARE CONSTRUCTED AND PRIOR TO INITIATING LAND–DISTURBING ACTIVITIES WITHIN THE TRIBUTARY DRAINAGE AREA.

DIVERSION DETAIL (D)
NO SCALE

GENERAL

1.) NOTICE OF INTENT (NOI) MUST BE SUBMITTED TO OHIO EPA FOR NPDES PERMIT 21 DAYS PRIOR TO THE START OF CLEARING AND/OR GRADING (IF APPLICABLE).
2.) CONTRACTOR MUST COMPLY WITH ALL LOCAL EROSION, SEDIMENT CONTROL, WASTE DISPOSAL, SANITARY, AND HEALTH REGULATIONS (E.G. PROVISION OF PORTABLE SANITARY FACILITIES, TEMPORARY FUEL TANK REGULATIONS, ETC.)
3.) THE CONTRACTOR MUST IMPLEMENT ALL NECESSARY PRACTICES TO PREVENT THE DISCHARGE OF NON–SEDIMENT POLLUTANTS INTO STORM WATER RUNOFF. UNDER NO CIRCUMSTANCE SHALL CONCRETE TRUCKS WASH OUT DIRECTLY INTO A DRAINAGE CHANNEL, STORM SEWER OR SURFACE WATERS OF THE STATE. NO EXPOSURE OF STORM WATER TO WASTE MATERIALS IS RECOMMENDED.
4.) OFF–SITE TRACKING OF SEDIMENTS AND DUST GENERATION SHALL BE MINIMIZED.
5.) THERE SHALL BE NO TURBID DISCHARGES RESULTING FROM DEWATERING ACTIVITIES. IF TRENCH OR GROUND WATER CONTAINS SEDIMENT, IT MUST PASS THROUGH A SEDIMENT SETTLING POND PRIOR TO BEING DISCHARGED FROM THE CONSTRUCTION SITE. AS AN ALTERNATIVE, THE CONTRACTOR MAY IMPLEMENT AN EQUALLY EFFECTIVE SEDIMENT CONTROL DEVICE, (E.G. SUMP PIT, FILTER BAG OR COMPARABLE PRACTICE) ONLY AS APPROVED BY THE ENGINEER.
6.) ALL FUEL TANKS AND DRUMS SHALL BE STORED IN MARKED STORAGE AREA. A DIKE SHALL BE CONSTRUCTED AROUND THIS STORAGE AREA WITH A MINIMUM CAPACITY EQUAL TO 110% OF THE VOLUME OF THE LARGEST CONTAINER IN THE STORAGE AREA. ALL ADDITIONAL REQUIREMENTS OF THE LOCAL FIRE AUTHORITY MUST BE FOLLOWED. IF THE FUEL TANKS HAVE A SELF–CONTAINED "DIKE," THE PLUG WILL BE KEPT IN THE "DIKE" TANK AT ALL TIMES. A MOBILE REFUELING SPILL PREVENTION AND RESPONSE PLAN MUST BE PREPARED AND FOLLOWED BY ALL SITE PERSONNEL.

GENERAL PERMIT DOCUMENT INCLUSION REQUIREMENTS

THIS PROJECT SWP3 INCORPORATES A COPY OF THE CURRENT OHIO EPA CONSTRUCTION GENERAL PERMIT. THE PART V.H. CERTIFICATION SHALL BE ATTACHED AND SIGNED PER THE SIGNATORY REQUIREMENTS OF PART V.G. OF THE PERMIT.

THE ACKNOWLEDGMENT DOCUMENT REQUIRED BY PERMIT PART II.E. SHALL BE SIGNED BY THE CONTRACTORS AND SUBCONTRACTORS INVOLVED IN THE IMPLEMENTATION OF THE SWP3 AS INDICATED. THE SIGNED DOCUMENT SHALL BE INCORPORATED INTO THIS SWP3.

A LOG DOCUMENTING GRADING AND STABILIZATION ACTIVITIES AS WELL AS ANY AMENDMENTS TO THE SWP3, WHICH OCCUR AFTER CONSTRUCTION ACTIVITIES COMMENCE, SHALL BE MAINTAINED BY QUALIFIED PERSONNEL UNDER THE DIRECTION OF THE EARTHWORK/SEWER CONTRACTOR OR OTHER AUTHORIZED REPRESENTATIVE OF THE PERMITTEE. THESE RECORDS SHALL BE INCORPORATED INTO THIS SWP3.

SOIL EROSION AND SEDIMENT CONTROL

THIS WORK SHALL CONSIST OF TEMPORARY AND PERMANENT CONTROL MEASURES AS SHOWN ON THE STORM WATER POLLUTION PREVENTION PLAN AND AS DIRECTED BY THE ENGINEER AND OWNER TO CONTROL SOIL EROSION AND SEDIMENTATION THROUGH THE USE OF SEDIMENT TRAPS, SEDIMENT BASINS, SILT FENCES, EARTH DIVERSION DIKES, CHECK DAMS, STORM DRAIN INLET PROTECTION, GRASSES AND MULCHES, CONSTRUCTED IN ACCORDANCE WITH THESE PLANS, AND THE CURRENT EDITION OF THE OHIO RAINWATER AND LAND DEVELOPMENT MANUAL. THE IMPLEMENTATION OF SOIL EROSION AND SEDIMENT CONTROL SHALL ALSO CONFORM TO THE REQUIREMENTS OF THE OHIO ENVIRONMENTAL PROTECTION AGENCY (OEPA) UNDER THE NPDES PERMIT PROGRAM FOR THE DISCHARGE OF STORM WATER FROM CONSTRUCTION SITES AND THE EROSION AND SEDIMENT CONTROL PRACTICES AND RECOMMENDATIONS OF THE MUNICIPALITY AND THE COUNTY SOIL AND WATER CONSERVATION DISTRICT. IF CONFLICTS EXIST REGARDING THE SOIL AND SEDIMENT CONTROL PRACTICES, THE MORE RESTRICTIVE SHALL APPLY.

IN ORDER TO CONTAIN SEDIMENT ON SITE, DIVERSION DITCHES, DIKES, AND SEDIMENTATION BASINS AND OTHER MEASURES FOR TRAPPING SEDIMENT SHALL BE CONSTRUCTED AS A FIRST STEP IN GRADING. CONSTRUCTION AND SHALL BE MADE FUNCTIONAL BEFORE UPSLOPE LAND DISTURBANCE TAKES PLACE. AS CONSTRUCTION PROGRESSES, TEMPORARY SEDIMENT BARRIERS, DITCH CHECKS, AND SILT FENCES SHALL BE USED TO INTERCEPT AND DETAIN SEDIMENT, TO DECREASE FLOW VELOCITIES, AND TO LIMIT THE FLOW FROM LARGE DISTURBED AREAS. EFFORTS TO PREVENT THE SILTATION OF THE STORM SEWER SYSTEM AND WATERWAYS SHALL INCLUDE THE PROTECTION OF INLET BASINS, CATCH BASINS, AND OTHER STORM INLETS (SEE INLET PROTECTION DETAIL). AS AREAS OF EARTHWORK CONSTRUCTION ARE COMPLETED, THE CONTRACTOR IS TO PROTECT AND STABILIZE THE AREAS WITH SEEDING AND MULCHING.

DUST CONTROL

THE CONTRACTOR SHALL SUPPLY ALL LABOR, MATERIAL, AND EQUIPMENT NECESSARY, SUCH AS CALCIUM CHLORIDE, WATER, OR A MOTORIZED DUST–FREE STREET SWEEPING DEVICE, AS DIRECTED BY THE ENGINEER, TO MAINTAIN ALL ROADWAYS BEING USED FOR ACCESS TO THE CONSTRUCTION SITE.

STORM INLET CASTING INSIGNIA

INLET CASTINGS WITH "DUMP NO WASTE – DRAINS TO WATERWAYS" NOTATION AND FISH INSIGNIA SHALL BE USED WHERE POSSIBLE.

EROSION CONTROL PROCEDURES

1.) TIMING OF SEDIMENT TRAPPING PRACTICES. SEDIMENT CONTROL PRACTICES SHALL BE FUNCTIONAL THROUGHOUT EARTH DISTURBING ACTIVITY. SETTLING FACILITIES, PERIMETER CONTROLS AND OTHER PRACTICES INTENDED TO TRAP SEDIMENT SHALL BE IMPLEMENTED AS THE FIRST STEP OF GRADING AND WITHIN SEVEN DAYS FROM THE START OF GRUBBING. THEY SHALL CONTINUE TO FUNCTION UNTIL THE UPSLOPE DEVELOPMENT AREA IS RESTABILIZED. OTHER EROSION CONTROL ITEMS MAY BE NECESSARY DUE TO ENVIRONMENTAL CONDITIONS.

2.) STABILIZATION OF DISTURBED AREAS. DISTURBED AREAS SHALL HAVE SOIL STABILIZATION APPLIED WITHIN SEVEN (7) DAYS IF THEY ARE TO REMAIN DORMANT (UNDISTURBED) FOR MORE THAN FOURTEEN (14) DAYS. FOR AREAS WITHIN FIFTY (50) FEET OF ANY LIVE STREAM, SOIL STABILIZATION PRACTICES SHALL BE INITIATED WITHIN TWO (2) DAYS ON ALL INACTIVE, DISTURBED AREAS. TEMPORARY OR PERMANENT SOIL STABILIZATION SHALL BE APPLIED TO DISTURBED AREAS WITHIN SEVEN (7) DAYS AFTER FINAL GRADE IS REACHED ON ANY PORTION OF THE SITE. FOR STOCKPILES OF TOPSOIL IN WINDROWS, THESE TIME LIMITS FOR INITIATION OF STABILIZATION OF ANY GIVEN PORTION OF THE WINDROW SHALL BE BASED ON THE DAY THAT PORTION IS PUT IN PLACE. WHEN SEASONAL CONDITIONS PROHIBIT THE APPLICATION OF TEMPORARY OR PERMANENT SEEDING, NON–VEGETATIVE SOIL STABILIZATION PRACTICES SUCH AS MULCHING AND MATTING SHALL BE USED.

WINTERIZATION–ANY DISTURBED AREA THAT IS NOT GOING TO BE WORKED 14 DAYS OR MORE MUST BE SEEDED AND MULCHED BY NOVEMBER 1 OR MUST HAVE A DORMANT SEEDING OR MULCH COVER APPLIED BETWEEN NOVEMBER 1 AND MARCH 1.

3.) SETTLING FACILITIES. CONCENTRATED STORMWATER RUNOFF FROM DISTURBED AREAS SHALL PASS THROUGH A SEDIMENT SETTLING FACILITY. SEDIMENT BASINS AND TRAPS SHALL BE CONSTRUCTED IN ACCORDANCE WITH THE OHIO RAINWATER AND LAND DEVELOPMENT MANUAL, AND PLAN DETAILS. THE CONTRACTOR SHALL PERIODICALLY CLEANOUT SEDIMENT WHEN CAPACITIES HAVE BEEN REDUCED BY 50% OF ORIGINAL. THE SEDIMENT SETTLING FACILITY SHALL REMAIN IN PLACE AND FUNCTIONAL UNTIL FINAL STABILIZATION OF THE SITE.

4.) SEDIMENT BARRIERS. SHEET FLOW RUNOFF FROM DISTURBED AREAS SHALL BE INTERCEPTED BY SEDIMENT BARRIERS. SEDIMENT BARRIERS, SUCH AS SILT FENCES, OR DIVERSIONS DIRECTING RUNOFF TO SETTLING FACILITIES, SHALL PROTECT ADJACENT PROPERTIES AND WATER RESOURCES FROM SEDIMENT TRANSPORTED BY SHEET FLOW.

5.) STREAM PROTECTION. STREAMS, INCLUDING BEDS AND BANKS, SHALL BE RESTABILIZED IMMEDIATELY AFTER IN–CHANNEL WORK IS COMPLETED, INTERRUPTED OR STOPPED. WHERE IN–CHANNEL WORK IS NECESSARY, PRECAUTIONS SHALL BE TAKEN TO STABILIZE THE WORK AREA DURING CONSTRUCTION TO MINIMIZE EROSION. ALL DITCHES WITH GRADES OVER 1.5% GRADE SHOULD HAVE DITCH PROTECTION APPLIED, INSTALLED PER MANUFACTURER'S RECOMMENDATIONS. (TYPE TO BE SHOWN ON S.W.P.P. PLAN).

6.) INSPECTION AND MAINTENANCE. ALL TEMPORARY AND PERMANENT EROSION AND SEDIMENT CONTROL PRACTICES SHALL BE INSPECTED AT LEAST ONCE EVERY SEVEN (7) CALENDAR DAYS AND WITHIN 24 HOURS AFTER ANY STORM EVENT GREATER THAN 0.5 INCHES OF RAIN PER 24 HOUR PERIOD. THE OWNER AND CONTRACTOR SHALL ASSIGN QUALIFIED PERSONNEL TO INSPECT THE PRACTICES AND PERFORM MAINTENANCE AND REPAIRS TO ASSURE CONTINUED PERFORMANCE OF THEIR INTENDED FUNCTION. THE CONTRACTOR SHALL MAINTAIN INSPECTION RECORDS OF THE CONDITION OF THE CONTROL PRACTICES AS WELL AS THEIR EFFECTIVENESS AND ANY NECESSARY CORRECTIVE ACTIONS. COPIES OF THESE REPORTS SHALL BE FORWARDED TO THE OWNER TO BE KEPT ON FILE FOR A PERIOD OF NO LESS THAN THREE (3) YEARS AFTER THE NOTICE OF TERMINATION (NOT) HAS BEEN FILED WITH THE OHIO E.P.A. THESE RECORDS ARE TO BE COLLECTED AND MAINTAINED BY THE CONTRACTOR UNTIL FINAL ACCEPTANCE OF THE SITE EROSION CONTROL ITEMS BY THE OWNER. THE OWNER SHALL THEN CONTINUE THESE RECORDS UNTIL THE NOTICE OF TERMINATION (NOT) IS FILED.

INSPECTION RECORDS SHALL BE "SIGNED" AND DATED BY THE APPROPRIATE INDIVIDUAL AS RECORD OF ACTIVITY.

IF A "BMP" IS NOT FUNCTIONING AS INTENDED, IT SHALL BE REPLACED WITHIN 10 DAYS.

IF A "BMP" IS MISSING IT SHALL BE INSTALLED WITHIN 10 DAYS.

7.) EXTENDED DEVELOPMENT: THE SOIL EROSION AND SEDIMENT CONTROL PRACTICES DEPICTED IN THESE PLANS ARE RELEVANT FOR ONLY THESE CONSTRUCTION PLANS.

8.) TEMPORARY SEEDING AND MULCHING
CONSTRUCT PER ODOT 659 USING:

Specifications
for
Temporary Seeding

Table 7.8.1 Temporary Seedling Species Selection

Seeding Dates	Species	Lb./1000 ft2	Lb/Acre
March 1 to August 15	Oats	3	128 (4 Bushel)
	Tall Fescue	1	40
	Annual Ryegrass	1	40
	Perennial Ryegrass	1	40
	Tall Fescue	1	40
	Annual Ryegrass	1	40
	Annual Ryegrass	1.25	55
	Perennial Ryegrass	3.25	142
	Creeping Red Fescue	0.4	17
	Kentucky Bluegrass	0.4	17
	Oats	3	128 (3 bushel)
	Tall Fescue	1	40
	Annual Ryegrass	1	40
August 16th to November	Rye	3	112 (2 bushel)
	Tall Fescue	1	40
	Annual Ryegrass	1	40
	Wheat	3	120 (2 bushel)
	Tall Fescue	1	40
	Annual Ryegrass	1	40
	Perennial Rye	1	40
	Tall Fescue	1	40
	Annual Ryegrass	1	40
	Annual Ryegrass	1.25	40
	Perennial Ryegrass	3.25	40
	Creeping Red Fescue	0.4	40
	Kentucky Bluegrass	0.4	
November 1 to Feb. 29	Use mulch only or dormant seeding		

Note: Other approved species may be substituted.

1. Structural erosion and sediment control practices such as diversions and sediment traps shall be installed and stabilized with temporary seeding prior to grading the rest of the construction site.
2. Temporary seed shall be applied between construction operations on soil that will not be graded or reworked for 21 days or greater. These idle areas shall be seeded within 7 days after grading.
3. The seedbed should be pulverized and loose to ensure the success of establishing vegetation. Temporary seeding should not be postponed if ideal seedbed preparation is not possible.

Mulching Temporary Seeding

1. Applications of temporary seeding shall include mulch, which shall be applied during or immediately after seeding. Seedings made during optimum seeding dates on favorable, very flat soil conditions may not need mulch to achieve adequate stabilization.

2. Materials:
- Straw—If straw is used, it shall be uncrotted small–grain straw applied at a rate of 2 tons per acre or 90 lbs/ 1,000 sq. ft. (2–3 bales)
- Hydroseeders—If wood cellulose fiber is used, it shall be used at 2000 lbs./ ac. or 46 lb./ 1,000–sq.–ft.
- Other—Other acceptable mulches include mulch mattings applied according to manufacturer's recommendations or wood chips applied at 6 ton/ ac.

3. Straw Mulch shall be anchored immediately to minimize loss by wind or water. Anchoring methods:
- Mechanical—A disk, crimper, or similar type tool shall be set straight to punch or anchor the mulch material into the soil. Straw mechanically anchored shall not be finely chopped but left to a length of approximately 6 inches.
- Mulch Netting—Netting shall be used according to the manufacturers recommendations. Netting may be necessary to hold mulch in place in areas of concentrated runoff and on critical slopes.
- Synthetic Binders—Synthetic binders such as Acrylic DLR (Agri–Tac), DCA–70, Petrosett, Terra Tack or equivalent may be used at rates recommended by the manufacturer.
- Wood–Cellulose Fiber—Wood–cellulose fiber binder shall be applied at a net dry wt. of 750 lb./ac. The wood–cellulose fiber shall be mixed with water and the mixture shall contain a maximum of 50 lb./ 100 gal.

4. Soil Amendments—Temporary vegetation seeding rates shall establish adequate stands of vegetation, which may require the use of soil amendments. Base rates for lime and fertilizer shall be used.

5. Seeding Method—Seed shall be applied uniformly with a cyclone spreader, drill, cultipacker seeder, or hydroseeder. When feasible, seed that has been broadcast shall be covered by raking or dragging and then lightly tamped into place using a roller or cultipacker. If hydroseeding is used, the seed and fertilizer will be mixed on–site and the seeding shall be done immediately and without interruption.

9.) PERMANENT SEEDING AND MULCHING

CONSTRUCT PER ODOT 659 USING CLASS 1 LAWN MIXTURE PLACED UPON A PREPARED BED (I.E. TOPSOIL, LIME, FERTILIZER, ETC).

Specifications
for
Permanent Seeding

Site Preparation
1. Subsoiler, plow, or other implement shall be used to reduce soil compaction and allow maximum infiltration. (Maximizing infiltration will help control both runoff rate and water quality.) Subsoiling should be done when the soil moisture is low enough to allow the soil to crack or fracture. Subsoiling shall not be done on slip–prone areas where soil preparation should be limited to what is necessary for establishing vegetation.
2. The site shall be graded as needed to permit the use of conventional equipment for seedbed preparation and seeding.
3. Topsoil shall be applied where needed to establish vegetation.

Seedbed Preparation
1. Lime—Agricultural ground limestone shall be applied to acid soil as recommended by a soil test. In lieu of a soil test, lime shall be applied at the rate of 100 pounds per 1,000–sq.–ft. or 2 tons per acre.
2. Fertilizer—Fertilizer shall be applied as recommended by a soil test. In place of a soil test, fertilizer shall be applied at a rate of 25 pounds per 1,000–sq. ft. or 1000 pounds per acre of a 10–10–10 or 12–12–12 analyses.
3. The lime and fertilizer shall be worked into the soil with a disk harrow, spring–tooth harrow, or other suitable field implement to a depth of 3 inches. On sloping land, the soil shall be worked on the contour.

Seeding Dates and Soil Conditions
Seeding should be done March 1 to May 31 or August 1 to September 30. If seeding occurs outside of the above–specified dates, additional mulch and irrigation may be required to ensure a minimum of 80% germination. Tillage for seedbed preparation should be done when the soil is dry enough to crumble and not form ribbons when compressed by hand. For winter seeding, see the following section on dormant seeding.

Dormant Seedings
1. Seedings should not be made from October 1 through November 20. During this period, the seeds are likely to germinate but probably will not be able to survive the winter.
2. The following methods may be used for "Dormant Seeding":
- From October 1 through November 20, prepare the seedbed, add the required amounts of lime and fertilizer, then mulch and anchor. After November 20, and before March 15, broadcast the selected seed mixture. Increase the seeding rates by 50% for this type of seeding.
- From November 20 through March 15, when soil conditions permit, prepare the seedbed, lime and fertilize, apply the selected seed mixture, mulch and anchor. Increase the seeding rates by 50% for this type of seeding.
- Apply seed uniformly with a cyclone seeder, drill, cultipacker seeder, or hydro–seeder (slurry may include seed and fertilizer) on a firm, moist seedbed.
- Where feasible, except where a cultipacker type seeder is used, the seedbed should be firmed following seeding operations with a cultipacker, roller, or light drag. On sloping land, seeding operations should be on the contour where feasible.

Mulching
1. Mulch material shall be applied immediately after seeding. Dormant seeding shall be mulched. 150% of the ground surface shall be covered with an approved material.
2. Materials
- Straw—If straw is used it shall be unrotted small–grain straw applied at the rate of 2 tons per acre or 90 pounds (two to three bales) per 1,000–sq. ft. The mulch shall be spread uniformly by hand or mechanically applied so the soil surface is covered. For uniform distribution of hand–spread mulch, divide area into approximately 1,000–sq.–ft. sections and spread two 45–lb. bales of straw in each section.
- Hydroseeders—If wood cellulose fiber is used, it shall be applied at 2,000 lb./ac. or 46 lb./1,000 sq. ft.
- Other—Other acceptable mulches include rolled erosion control mattings or blankets applied according to manufacturer's recommendations or wood chips applied at 6 tons per acre.
- Synthetic Binders—Synthetic binders such as Acrylic DLR (Agri–Tac), DCA–70, Petrosett, Terra Tack or equivalent may be used at rates specified by the manufacturer.
- Wood Cellulose Fiber—Wood cellulose fiber shall be applied at a net dry weight of 750 pounds per acre. The wood cellulose fiber shall be mixed with water with the mixture containing a maximum of 50 pounds cellulose per 100 gallons of water.

Irrigation
Permanent seeding shall include irrigation to establish vegetation during dry weather or on adverse site conditions, which require adequate moisture for seed germination and plant growth.

Irrigation rates shall be monitored to prevent erosion and damage to seeded areas from excessive runoff.

Table 7.10.2 Permanent Seeding

Seed Mix	Seeding Rate Lbs./Acre	Seeding Rate Lbs./1,000 Sq. Feet	Notes:
General Use			
Creeping Red Fescue	20–40	1/2–1	For close mowing & for waterways with <2.0 f/sec velocity
Domestic Ryegrass	10–20	1/4–1/2	
Kentucky Bluegrass	20–40	1/2–1	
Tall Fescue	40–50	1–1 1/4	
Turf–type (dwarf) Fescue	90	2 1/4	
Steep Banks or Cut Slopes			
Tall Fescue	40–50	1–1 1/4	
Crown Vetch	10–20	1/4–1/2	Do not seed later than August
Tall Fescue	20–30	1/2–3/4	
Flat Pea	20–25	1/2–3/4	Do not seed later than August
Tall Fescue	20–30	1/2–3/4	
Road Ditches and Swales			
Tall Fescue	40–50	1–1 1/4	
Turf–type (Dwarf) Fescue	90	2 1/4	
Kentucky Bluegrass	5	0.1	
Lawns			
Kentucky Bluegrass / Perennial Ryegrass	100–120	2 / 2	
Kentucky Bluegrass / Creeping Red Fescue	100–120	2 / 1–1/2	For shaded areas

Note: Other approved seed species may be substituted.

INSPECTION SCHEDULE:
1.) ALL EROSION AND SEDIMENT CONTROL PRACTICES ARE TO BE INSPECTED AT 7 DAY INTERVALS AND AFTER ANY STORM EVENT GREATER THAN 0.5 INCHES OF RAIN PER 24 HOUR PERIOD. (SEE "MAINTENANCE AND INSPECTION" NOTE).
2.) SEDIMENT SETTLING FACILITIES TO BE CHECKED AFTER EACH MAJOR PHASE OF DEVELOPMENT FOR SEDIMENT ACCUMULATION.
3.) VEGETATIVE PLANTINGS–PLANTINGS TO BE CHECKED DURING SPRING, SUMMER, AND EARLY FALL.
4.) REPAIRS–ANY EROSION CONTROL MEASURES, STRUCTURAL MEASURES, OR OTHER RELATED ITEMS IN NEED OF REPAIR OR MAINTENANCE MUST BE REPAIRED OR MAINTAINED WITHIN 3 DAYS OF THE INSPECTION, WITH THE EXCEPTION OF SEDIMENT SETTLING PONDS, WHICH MUST BE REPAIRED OR MAINTAINED WITHIN 10 DAYS.
5.) MOWING–GRASSED AREAS ARE TO BE MOWED REGULARLY.
6.) FERTILIZATION–SEEDED AREAS WHERE THE SEED HAS NOT PRODUCED AT LEAST A UNIFORM VEGETATIVE COVER WITH A DENSITY OF AT LEAST 70% COVER FOR THE AREA, WILL BE INSPECTED, RESEEDED, AND FERTILIZED AS NECESSARY.

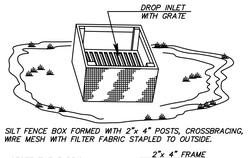

INLET PROTECTION FOR YARD INLETS

NOTE: "INLET PROTECTION AFTER PAVEMENT CONSTRUCTION" SHALL BE INSTALLED ON EACH BASIN AFTER PAVEMENT CONSTRUCTION IS COMPLETE. COMMERCIALLY AVAILABLE BASIN SEDIMENT FILTER BAG BY DANDY PRODUCTS OR AS APPROVED BY THE GOVERNING AUTHORITY SHALL BE INSTALLED. PERIODIC CLEANING AS NECESSARY TO MAINTAIN EFFECTIVENESS SHALL BE INCLUDED IN THE LUMP SUM BID FOR "MAINTENANCE OF EROSION CONTROL ITEMS".

STORM DRAIN INLET PROTECTION DETAIL (IP)
NO SCALE

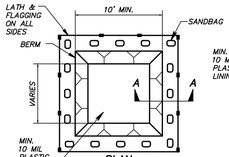

PLAN *NO SCALE*

SECTION A–A *NO SCALE*

–TEMPORARY CONCRETE WASHOUT FACILITIES (TYPE BELOW GRADE) SHOULD BE CONSTRUCTED AS SHOWN ON THE DETAIL, WITH A RECOMMENDED MINIMUM LENGTH AND MINIMUM WIDTH OF 10 FT. THE QUANTITY AND VOLUME SHOULD BE SUFFICIENT TO CONTAIN ALL LIQUID AND CONCRETE WASTE GENERATED BY WASHOUT OPERATIONS.

–LATH AND FLAGGING SHOULD BE COMMERCIAL TYPE.

–PLASTIC LINING MATERIAL SHOULD BE A MINIMUM OF 10 MIL POLYETHYLENE SHEETING AND SHOULD BE FREE OF HOLES, TEARS, OR OTHER DEFECTS THAT COMPROMISE THE IMPERMEABILITY OF THE MATERIAL.

–ALL WORK NECESSARY TO INSTALL AND MAINTAIN THE WASHOUT FACILITY SHALL BE INCLUDED IN THE PRICE OF THE PROJECT.

TEMPORARY CONCRETE WASHOUT FACILITY DETAIL (TYPE BELOW GRADE)

Specifications
for
Additional Construction Site Pollution Controls

1. Construction personnel, including subcontractors who may use or handle hazardous or toxic materials, shall be made aware of the following general guidelines regarding disposal and handling of hazardous and construction wastes:
   - Prevent spills
   - Use products up
   - Follow label directions for disposal
   - Remove lids from empty bottles and cans when disposing in trash
   - Recycle wastes whenever possible
   - Don't pour into waterways, storm drains or onto the ground
   - Don't pour down the sink, floor drain or septic tanks
   - Don't bury chemicals or containers
   - Don't burn chemicals or containers
   - Don't mix chemicals together
2. **Containers shall be provided for the proper collection of all waste material including construction debris, trash, petroleum products and any hazardous materials used on–site.** Containers shall be covered and not leaking. All waste material shall be disposed of at facilities approved for that material. Construction Demolition and Debris (CD&D) waste must be disposed of at an Ohio EPA approved CD&D landfill.
3. **No construction related waste materials are to be buried on–site.** By exception, clean fill (bricks, hardened concrete, soil) may be utilized in a way which does not encroach upon natural wetlands, streams or floodplains or result in the contamination of waters of the state.
4. **Handling Construction Chemicals.** Mixing, pumping, transferring or other handling of construction chemicals such as fertilizer, lime, asphalt, concrete drying compounds, and all other potentially hazardous materials shall be performed in an area away from any watercourse, ditch or storm drain.
5. **Equipment Fueling and Maintenance,** oil changing, etc., shall be performed away from watercourses, ditches or storm drains, in an area designated for that purpose. The designated area shall be equipped for recycling oil and catching spills. Secondary containment shall be provided for all fuel oil storage tanks. These areas must be inspected every seven days and within 24 hrs. of a 0.5 inch or greater rain event to ensure there are no exposed materials which would contaminate storm water. Site operators must be aware that Spill Prevention Control and Countermeasures (SPCC) requirements may apply. An SPCC plan is required for sites with one single above ground tank of 660 gallons or more, accumulative above ground storage of 1320 gallons or more, or 42,000 gallons of underground storage. Contaminated soils must be disposed of in accordance with Item 8.
6. **Concrete Wash Water** shall not be allowed to flow to streams, ditches, storm drains, or any other water conveyance. A sump or pit with no potential for discharge shall be constructed if needed to contain concrete wash water. Field tile or other subsurface drainage structures within 10 ft. of the sump shall be cut and plugged. For small projects, truck chutes may be rinsed away from any water conveyances.
7. **Spill Reporting Requirements:** Spills on pavement shall be absorbed with sawdust or kitty litter and disposed of with the trash at a licensed sanitary landfill. Hazardous or industrial wastes such as most solvents, gasoline, oil–based paints, and cement curing compounds require special handling. Spills shall be reported to Ohio EPA's (1–800–282–9378). Spills of 25 gallons or more of petroleum products shall be reported to Ohio EPA, the local fire department, and the Local Emergency Planning Committee within 30 min. of the discovery of the release. All spills which contact waters of the state must be reported to Ohio EPA.
8. **Contaminated Soils.** If substances such as oil, diesel fuel, hydraulic fluid, antifreeze, etc. are spilled, leaked, or released onto the soil, the soil should be dug up and disposed of at licensed sanitary landfill or other approved petroleum contaminated soil remediation facility. (not a construction/demolition debris landfill). Note that storm water run off associated with contaminated soils are not be authorized under Ohio EPA's General Storm Water Permit associated with Construction Activities.
9. **Open Burning.** No materials containing rubber, grease, asphalt, or petroleum products, such as tires, autoparts, plastics or plastic–coated wire may be burned (OAC 3745–19). Open burning is not allowed in restricted areas, which are defined as: 1) within corporation limits; 2) within 1000 feet outside a municipal corporation having a population of 1000 to 10,000; and 3) a one mile zone outside of a corporation of 10, 000 or more. Outside of restricted areas, no open burning is allowed within a 1000 feet of an inhabited building on another property. Open burning is permissible in a restricted area for: heating tar, welding, smudge pots and similar occupational needs, and heating for warmth or outdoor barbeques. Outside of restricted areas, open burning is permissible for landscape or land–clearing wastes (plant material), with prior written permission from Ohio EPA), and agricultural wastes, excluding buildings.
10. **Dust Control or dust suppressants** shall be used to prevent nuisance conditions, in accordance with the manufacturer's specifications and in a manner, which prevent a discharge to waters of the state. Sufficient distance must be provided between applications and nearby bridges, catch basins, and other waterways. Application (excluding water) may not occur when rain is imminent as noted in the short term forecast. Used oil may not be applied for dust control.
11. **Other Air Permitting Requirements:** Certain activities associated with construction will require air permits including but not limited to: mobile concrete batch plants, mobile asphalt plants, concrete crushers, large generators, etc. These activities will require specific Ohio EPA Air Permits for installation and operation. Operators must seek information from the corresponding district of Ohio EPA. For demolition of all commercial sites, a Notification for Restoration and Demolition must be submitted to Ohio EPA to determine if asbestos–corrective actions are required.
12. **Process Wa

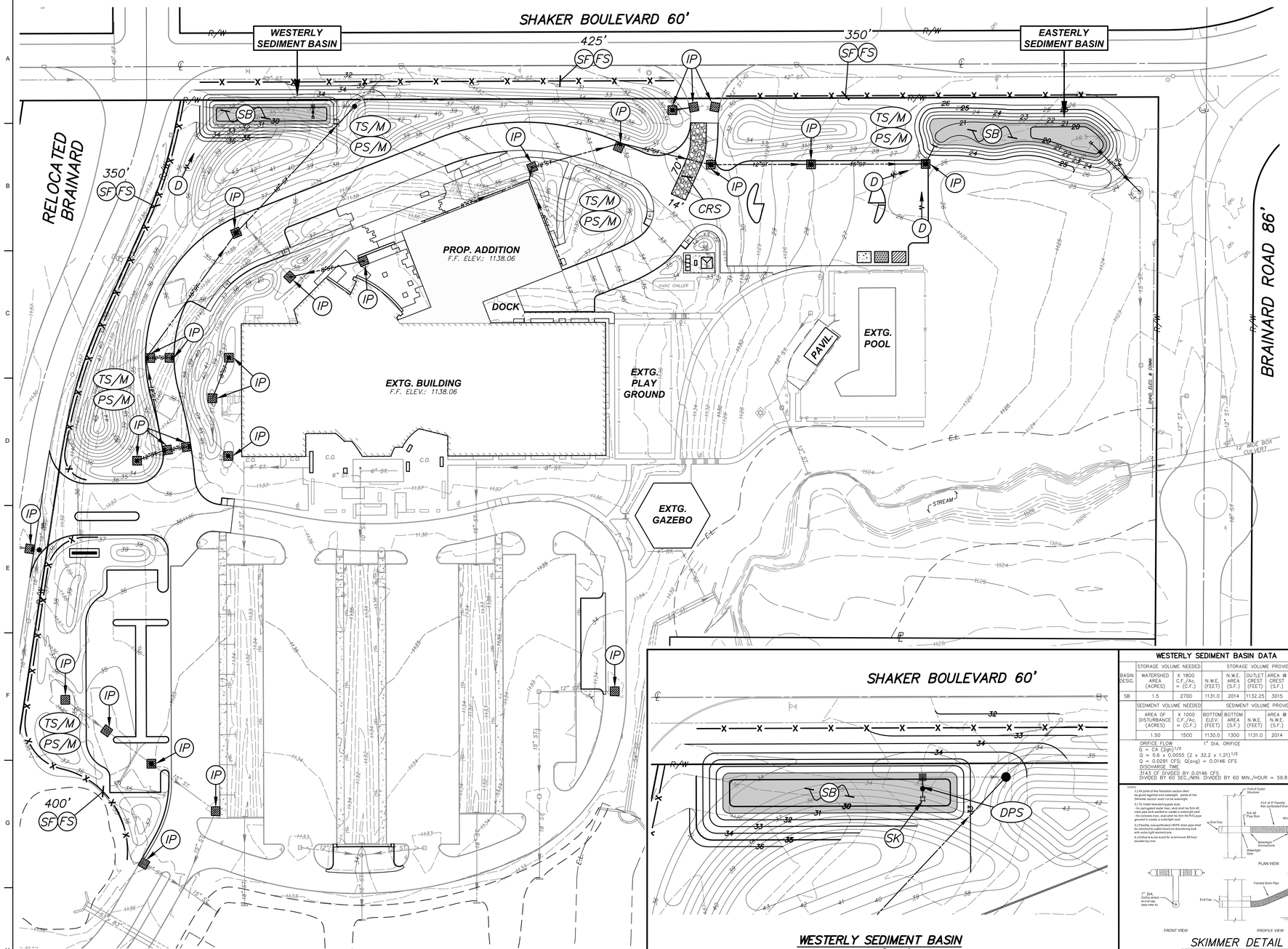

LEGEND:

- (IP) INLET PROTECTION
- (SF FS) SILT FENCE ALT. FILTER SOCK
- (SK) SKIMMER
- (D) DRAINAGE ROUTING (DIVERSION)
- (DPS) DROP PIPE STRUCTURE
- (SB) SEDIMENT BASIN
- (CRS) CONSTRUCTION ROAD STABILIZATION
- (TS/M) TEMPORARY SEEDING & MULCHING
- (PS/M) PERMANENT SEEDING & MULCHING
- CONCRETE WASHOUT PIT
- FUEL STORAGE AREA (GRADE TO CREATE DEPRESSED AREA RINGED WITH DIKING TO PREVENT OUTWARD SPILLS)
- STORAGE OF SOLID, SANITARY AND TOXIC WASTE (DUMPSTER AREA)

N

GRAPHIC SCALE
0 20' 40'

WESTERLY SEDIMENT BASIN
SCALE: 1" = 20'

WESTERLY SEDIMENT BASIN DATA

BASIN DESIG.	STORAGE VOLUME NEEDED: WATERSHED AREA (ACRES)	X 1800 C.F./Ac. = (C.F.)	STORAGE VOLUME PROVIDED: N.W.E. (FEET)	N.W.E. AREA (S.F.)	OUTLET CREST (FEET)	AREA @ CREST (S.F.)	TOTAL STORAGE (C.F.)	WIDTH OF EMERGENCY SPILLWAY (FEET)	EMERGENCY SPILLWAY ELEV. (FEET)
SB	1.5	2700	1131.0	2014	1132.25	3015	3143	5	1133.25

SEDIMENT VOLUME NEEDED: AREA OF DISTURBANCE (ACRES)	X 1000 C.F./Ac. = (C.F.)	SEDIMENT VOLUME PROVIDED: BOTTOM ELEV. (FEET)	BOTTOM AREA (S.F.)	N.W.E. (FEET)	AREA @ N.W.E. (S.F.)	TOTAL STORAGE (C.F.)	OUTLET INFO: BARREL PIPE (IN.)	RISER PIPE (IN.)	ORIFICE (IN.)	DRAIN TIME (HRS)
1.50	1500	1130.0	1300	1131.0	2014	1650	8"	15"	1"	59.8

ORIFICE FLOW
$Q = CA\ (2gh)^{1/2}$
$Q = 0.6 \times 0.0055\ (2 \times 32.2 \times 1.21)^{1/2}$
$Q = 0.0291$ CFS; $Q(avg) = 0.0146$ CFS
DISCHARGE TIME
3143 CF DIVIDED BY 0.0146 CFS
DIVIDED BY 60 SEC./MIN. DIVIDED BY 60 MIN./HOUR = 59.8 HOURS

1" DIA. ORIFICE
ORIFICE INVERT = 1131.0
CONCRETE BASE 2'-0"x2'-0"

(SB) (DPS)

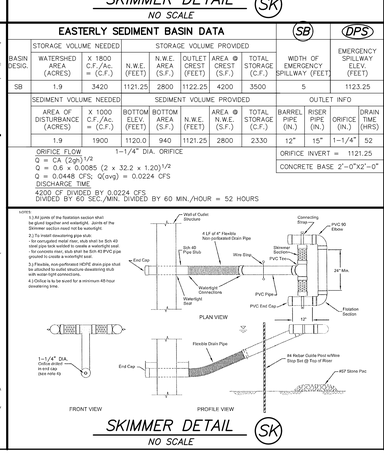

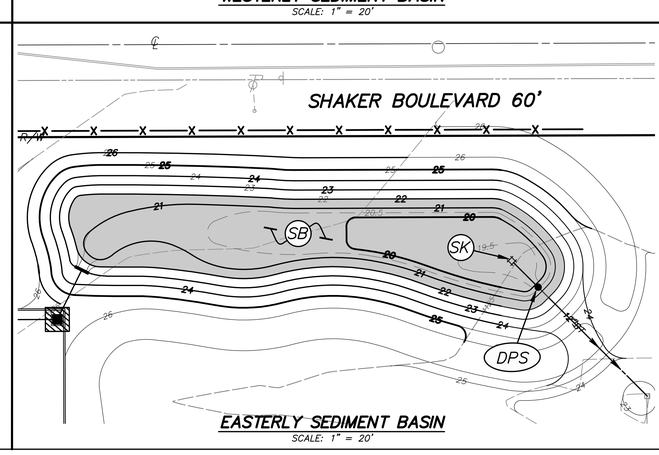

EASTERLY SEDIMENT BASIN
SCALE: 1" = 20'

EASTERLY SEDIMENT BASIN DATA

BASIN DESIG.	STORAGE VOLUME NEEDED: WATERSHED AREA (ACRES)	X 1800 C.F./Ac. = (C.F.)	STORAGE VOLUME PROVIDED: N.W.E. (FEET)	N.W.E. AREA (S.F.)	OUTLET CREST (FEET)	AREA @ CREST (S.F.)	TOTAL STORAGE (C.F.)	WIDTH OF EMERGENCY SPILLWAY (FEET)	EMERGENCY SPILLWAY ELEV. (FEET)
SB	1.9	3420	1121.25	2800	1122.25	4200	3500	5	1123.25

SEDIMENT VOLUME NEEDED: AREA OF DISTURBANCE (ACRES)	X 1000 C.F./Ac. = (C.F.)	SEDIMENT VOLUME PROVIDED: BOTTOM ELEV. (FEET)	BOTTOM AREA (S.F.)	N.W.E. (FEET)	AREA @ N.W.E. (S.F.)	TOTAL STORAGE (C.F.)	OUTLET INFO: BARREL PIPE (IN.)	RISER PIPE (IN.)	ORIFICE (IN.)	DRAIN TIME (HRS)
1.9	1900	1120.0	940	1121.25	2800	2330	12"	15"	1-1/4"	52

ORIFICE FLOW
$Q = CA\ (2gh)^{1/2}$
$Q = 0.6 \times 0.0085\ (2 \times 32.2 \times 1.20)^{1/2}$
$Q = 0.0448$ CFS; $Q(avg) = 0.0224$ CFS
DISCHARGE TIME
4200 CF DIVIDED BY 0.0224 CFS
DIVIDED BY 60 SEC./MIN. DIVIDED BY 60 MIN./HOUR = 52 HOURS

1-1/4" DIA. ORIFICE
ORIFICE INVERT = 1121.25
CONCRETE BASE 2'-0"x2'-0"

(SB) (DPS)

Code Consultant
PHILIP R. SHERMAN, P.E.
P.O. BOX 216
ELKINS, NH 03233-0216
603-526-6190

Kitchen Consultant
RICCA DESIGN STUDIOS
515 WASHINGTON STREET
NORWELL, MA 02061
303-621-6327

Landscape Architect
STEPHEN STIMSON ASSOCIATES
15 DEPOT AVENUE
FALMOUTH, MA 02540
508-548-8119

Civil Engineer
DONALD G. BOHNING & ASSOCIATES
7979 PUB PARKWAY
VALLEY VIEW, OH 44125
216-642-1130

Mechanical, Electrical, & Plumbing Engineer
KARPINSKI ENGINEERING
3135 EUCLID AVENUE
CLEVELAND, OH 44115
216-391-3700

Structural Engineer
GILSANZ MURRAY STEFICEK, LLP
129 WEST 27TH STREET
NEW YORK, NY 10001
212-254-0030

CENTERBROOK
Architects and Planners, LLP
67 Main Street
Post Office Box 955
Centerbrook, Connecticut 06409-0955
Telephone 860.767.0175
Facsimile 860.767.8719

STATE OF OHIO
DONALD G. BOHNING
WISE
E-61631
REGISTERED
PROFESSIONAL ENGINEER

THE PARK SYNAGOGUE 27500 SHAKER BOULEVARD PEPPER PIKE, OHIO 44124

ISSUED:

No	Name	Date

PHASE:
SITE DEVELOPMENT PLAN APPROVAL

DRAWING NAME:
EROSION CONTROL S.W.P.P. PLAN 2

JOB #: 1721 (DGB#3406-8)

© 2021 CENTERBROOK ARCHITECTS AND PLANNERS

DRAWN BY: TM
DATE: 06/30/2021
CHECKED BY: EK
SCALE: AS NOTED

SHEET:
C10.01

M:\projects\pj\3500--3499\3406-8\dwg\3406808 C10.dwg 6/16/2021 - 1:19pm

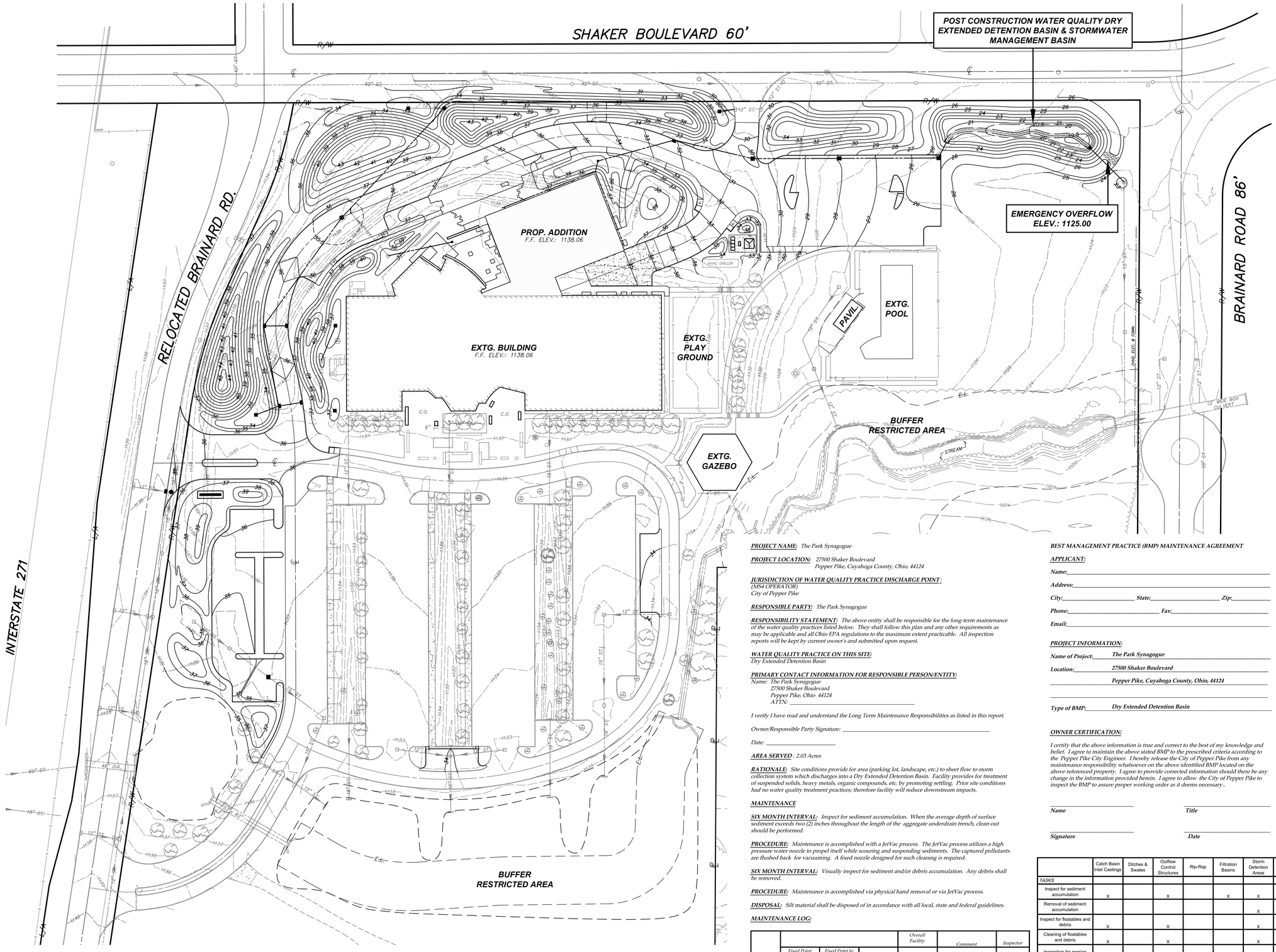

PROJECT NAME: *The Park Synagogue*

PROJECT LOCATION: *27500 Shaker Boulevard*
Pepper Pike, Cuyahoga County, Ohio, 44124

JURISDICTION OF WATER QUALITY PRACTICE DISCHARGE POINT :
(MS4 OPERATOR)
City of Pepper Pike

RESPONSIBLE PARTY: *The Park Synagogue*

RESPONSIBILITY STATEMENT: *The above entity shall be responsible for the long-term maintenance of the water quality practices listed below. They shall follow this plan and any other requirements as may be applicable and all Ohio EPA regulations to the maximum extent practicable. All inspection reports will be kept by current owner's and submitted upon request.*

WATER QUALITY PRACTICE ON THIS SITE:
Dry Extended Detention Basin

PRIMARY CONTACT INFORMATION FOR RESPONSIBLE PERSON/ENTITY:
Name: The Park Synagogue
27500 Shaker Boulevard
Pepper Pike, Ohio 44124
ATTN: _____

I verify I have read and understand the Long Term Maintenance Responsibilities as listed in this report.

Owner/Responsible Party Signature: _____

Date: _____

AREA SERVED *: 2.03 Acres*

RATIONALE: *Site conditions provide for area (parking lot, landscape, etc.) to sheet flow to storm collection system which discharges into a Dry Extended Detention Basin. Facility provides for treatment of suspended solids, heavy metals, organic compounds, etc. by promoting settling. Prior site conditions had no water quality treatment practices; therefore facility will reduce downstream impacts.*

MAINTENANCE

SIX MONTH INTERVAL: *Inspect for sediment accumulation. When the average depth of surface sediment exceeds two (2) inches throughout the length of the aggregate underdrain trench, clean-out should be performed.*

PROCEDURE: *Maintenance is accomplished with a JetVac process. The JetVac process utilizes a high pressure water nozzle to propel itself while scouring and suspending sediments. The captured pollutants are flushed back for vacuuming. A fixed nozzle designed for such cleaning is required.*

SIX MONTH INTERVAL: *Visually inspect for sediment and/or debris accumulation. Any debris shall be removed.*

PROCEDURE: *Maintenance is accomplished via physical hand removal or via JetVac process.*

DISPOSAL: *Silt material shall be disposed of in accordance with all local, state and federal guidelines.*

MAINTENANCE LOG:

Date	Fixed Point to Sump Bottom	Fixed Point to Top of Sediment	Sediment Depth	Overall Facility Visual Condition	Comment	Inspector

REPORTING: *Inspections (Maintenance Log) shall be maintained on-site and made available upon request. Copies of the logs shall be submitted annually to the City of Pepper Pike. Contact such entity to verify reporting schedule date.*

BEST MANAGEMENT PRACTICE (BMP) MAINTENANCE AGREEMENT

APPLICANT:

Name: _____

Address: _____

City: _____ ***State:*** _____ ***Zip:*** _____

Phone: _____ ***Fax:*** _____

Email: _____

PROJECT INFORMATION:

Name of Project: *The Park Synagogue*

Location: *27500 Shaker Boulevard*

Pepper Pike, Cuyahoga County, Ohio, 44124

Type of BMP: *Dry Extended Detention Basin*

OWNER CERTIFICATION:

I certify that the above information is true and correct to the best of my knowledge and belief. I agree to maintain the above stated BMP to the prescribed criteria according to the Pepper Pike City Engineer. I hereby release the City of Pepper Pike from any maintenance responsibility whatsoever on the above identified BMP located on the above referenced property. I agree to provide corrected information should there be any change in the information provided herein. I agree to allow the City of Pepper Pike to inspect the BMP to assure proper working order as it deems necessary .

Name ***Title***

Signature ***Date***

	Catch Basin Inlet Castings	Ditches & Swales	Outflow Control Structures	Rip-Rap	Filtration Basins	Storm Detention Areas	Wetlands	Emergency Overflow	Schedule
TASKS									
Inspect for sediment accumulation	X		X		X	X			Annually
Removal of sediment accumulation						X			Every 2 years as needed
Inspect for floatables and debris	X		X			X			Annually
Cleaning of floatables and debris	X		X			X			Annually
Inspection for erosion									Annually
Re-establish permanent vegetation on eroded slopes									As Needed
Replacement of stone									Every 3-5 years as needed
Clean streets									Semi-Annual
Mowing									1-2 Times per year
Inspect structural elements during wet weather and compare to plans (by professional engineer, report to property owner)	X		X			X		X	Annually
Make adjustments or replacements as determined by annual wet weather inspection	X		X			X		X	As Needed

GRAPHIC SCALE 0 20' 40'

Code Consultant
PHILIP R. SHERMAN, P.E.
P.O. BOX 216
ELKINS, NH 03233-0216
603-526-6190

Kitchen Consultant
RICCA DESIGN STUDIOS
515 WASHINGTON STREET
NORWELL, MA 02061
303-621-6327

Landscape Architect
STEPHEN STIMSON ASSOCIATES
15 DEPOT AVENUE
FALMOUTH, MA 02540
508-548-8119

Civil Engineer
DONALD G. BOHNING & ASSOCIATES
7979 PUB PARKWAY
VALLEY VIEW, OH 44125
216-642-1130

Mechanical, Electrical, & Plumbing Engineer
KARPINSKI ENGINEERING
3135 EUCLID AVENUE
CLEVELAND, OH 44115
216-391-3700

Structural Engineer
GILSANZ MURRAY STEFICEK, LLP
129 WEST 27TH STREET
NEW YORK, NY 10001
212-254-0030

CENTERBROOK
Architects and Planners, LLP
67 Main Street
Post Office Box 955
Centerbrook, Connecticut 06409-0955
Telephone 860.767.0175
Facsimile 860.767.8719

STATE OF OHIO — RONALD E. WISE — E-61631 — REGISTERED PROFESSIONAL ENGINEER

THE PARK SYNAGOGUE 27500 SHAKER BOULEVARD PEPPER PIKE, OHIO 44124

ISSUED:

No	Name	Date

PHASE:
SITE DEVELOPMENT PLAN APPROVAL

DRAWING NAME:
COMPREHENSIVE STORM WATER OPERATION & MANAGEMENT PLAN

JOB #: 1721 (DGB#3406-8)

© 2021 CENTERBROOK ARCHITECTS AND PLANNERS

DRAWN BY: TM | DATE: 06/30/2021
CHECKED BY: EK | SCALE: AS NOTED

SHEET:
C11.00

M:\Jobs\#\1800s\3406-8\dwg\3406c8 C11.dwg 6/16/2021 - 1:08pm

LEGEND

ITEM	DESCRIPTION
R/W	RIGHT-OF-WAY
℄	CENTERLINE OF R/W
	PROPERTY LINE
ST	STORM SEWER & MANHOLE
SAN	SANITARY SEWER & MANHOLE
CO	SANITARY SEWER CLEANOUT
W	WATER MAIN, HYDRANT & VALVE
WSO	WATER SHUTOFF
G GSO	GAS MAIN AND GAS SHUTOFF VALVE
TELE	UNDRGD. TELEPHONE DUCTS/CONDUIT AND MANHOLE
ELEC	UNDRGD. ELECTRIC DUCTS/ CONDUIT
	OVERHEAD WIRES (AS NOTED)
	POST SIGN
T	TRAFFIC CONTROL BOX
	TREE
	WOOD UTILITY POLE
	WOOD UTILITY POLE WITH ANCHOR
	LIGHT POLE
	CONCRETE
	ASPHALT
1163	SPOT ELEVATION
1162	CONTOUR ELEVATION
	METAL GUARD POST
C.L.F.	CHAIN LINK FENCE
	EXISTING WETLANDS

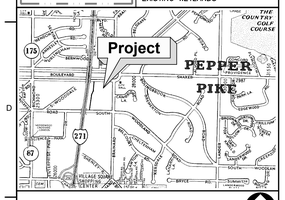

VICINITY MAP

SHAKER BOULEVARD 60' R/W

BRAINARD ROAD 86' R/W

INTERSTATE 271

RELOCATED BRAINARD ROAD (Variable) VOL. 331 PGS. 87-88 C.M.R.

P.P.N. 872-01-006
ANSHE EMETH BETH TEFILAH CONGREGATION
DEED VOL. 12338 PG. 237
(REMAINDER)

PARK EAST SYNAGOGUE BUILDING

P.P.N. 872-01-004
THE PARK SYNAGOGUE
VOL. 85-4606 PG. 43 O.R.
(REMAINDER)

LOT SPLIT
VOL. 310 Pg. 41 C.C.M.R.

BRAINARD ROAD ESTATES SUBDIVISION VOLUME 242 PAGE 40 C.M.R.

S/L 8
S/L 7
S/L 6

GRASS PLAY FIELD AREA
PLAYGROUND
POOL
GAZEBO
STREAM
EDGE OF BRUSH
EDGE OF WOODS
GRASS
ASPHALT DRIVE
ASPHALT PAVEMENT w/ VERT. CONC. CURB
CONC. WALK
FENCE
WALL
DECK
GATE
PAVILION
(3) FLAG POLES
STORM WATER RETENTION BASIN
STORM WATER RETENTION AREA
GRASS BIO-RETENTION AREA
ASPHALT PARKING SURFACE
GRASS LANDSCAPING
AGGREGATE DRIVE
GUARDRAIL
EDGE OF PAVEMENT
WIRE K/W FENCE
DRIP LINE
GRADE LINE
TOP OF WALL ELEV. =1132.73
TOP OF WALL ELEV. =1137.36
TOP OF WALL ELEV. =1134.77
F.F. 1138.09
GREASE TRAP
GAS REGULATOR
ELEC. TRANSFORMER w/ METER
F.F. 1138.09
F.F. 1138.09
BENCHMARK: TOP OF HYDRANT ELEV. =1139.21
BENCHMARK: TOP OF HYDRANT ELEV. =1138.52
BENCHMARK: TOP OF HYDRANT ELEV. =1138.05
3.5' HIGH SIGN
STONE PILLAR
JYMO SHELTER
BENCH SEAT
BENCH
LANDSCAPING
GRADE
CONC.
C.O.
FORCE MAIN T.C. =1125.10
ABANDONED CONTROL BOX
POLE w/ ELEC. DROP
POLE w/ COMM. & ELEC. DROP
WR. MON. USED N89°40'10"W, 0.26'
WR. MON. USED
WR. MON. OBS. N01°19'50"E, 718.41'
N01°19'50"E, 1566.50' C/L TO C/L SURVEY & USED
SOUTH WOODLAND ROAD 100'
CAMBRIDGE LANE 60'
CULVERT TOP =1119.96 INV. =1114.4
CULVERT TOP =1120.04 INV. =1115.1
12" WIDE BOX CULVERT
3" GAS
4" GAS
8" SAN. (INACTIVE)
8" SAN. FORCEMAIN
8" SAN. (INACTIVE)
8" SAN
6" SAN
4" SAN
12" ST.
15" ST.
18" ST.
24" ST.
30" ST.
36" ST.
48" ST.
60" ST.
72" ST.
90" ST.
96" DIA.
OHW. WIRES
ELEC.
TELE.
TELE. & ELEC.
G
W
S
SAN
ST
R/W
℄
SETBACK
75' SETBACK
30' SETBACK
45' SETBACK
10' SETBACK
C.O.
CONC.
GRADE
INV. 1130.0
INV. 1129.6
INV. 12" =1130.4
INV. 1124.4
INV. 48" =1130.3
INV. 48" =1129.5
INV. 54" =1124.4

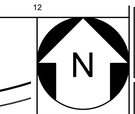

SURVEY REFERENCES:

ORIGINAL SURVEY OF SUBJECT LAND BY DONALD G. BOHNING & ASSOC. INC. FOR THE PARK SYNAGOGUE DATED DECEMBER 2001.

NOTES:

1. UNDERGROUND UTILITIES ARE SHOWN BASED UPON ACTUAL LOCATIONS OF ABOVE GROUND STRUCTURES AND RECORDS OF OTHERS AS TO UNDERGROUND LOCATIONS, SIZES, AND CONFIGURATIONS.
2. WETLAND INFORMATION PROVIDED BY DAVEY RESOURCE GROUP, 905 BRYCE ROAD, P.O. BOX 5193, KENT, OHIO 44240.
3. CAUTION: ATTEMPTS TO LOCATE THE GAS LINE SERVICING THE POOL HAVE BEEN UNSUCCESSFUL. POSSIBLE LOCATION COULD BE PARALLEL TO THE NORTHERLY BUILDING LINE & SIDEWALK.

Code Consultant
PHILIP R. SHERMAN, P.E.
P.O. BOX 216
ELKINS, NH 03233-0216
603-526-6190

Kitchen Consultant
RICCA DESIGN STUDIOS
515 WASHINGTON STREET
NORWELL, MA 02061
303-621-6327

Landscape Architect
STEPHEN STIMSON ASSOCIATES
15 DEPOT AVENUE
FALMOUTH, MA 02540
508-548-8119

Civil Engineer
DONALD G. BOHNING & ASSOCIATES
7979 PUB PARKWAY
VALLEY VIEW, OH 44125
216-642-1130

Mechanical, Electrical, & Plumbing Engineer
KARPINSKI ENGINEERING
3135 EUCLID AVENUE
CLEVELAND, OH 44115
216-391-3700

Structural Engineer
GILSANZ MURRAY STEFICEK, LLP
129 WEST 27TH STREET
NEW YORK, NY 10001
212-254-0030

CENTERBROOK
Architects and Planners, LLP
67 Main Street
Post Office Box 955
Centerbrook, Connecticut 06409-0955
Telephone 860.767.0175
Facsimile 860.767.8719

STATE OF OHIO · RONALD E. WISE · E-61631 · REGISTERED PROFESSIONAL ENGINEER

THE PARK SYNAGOGUE
27500 SHAKER BOULEVARD
PEPPER PIKE, OHIO 44124

ISSUED:

No	Name	Date

PHASE:
SITE DEVELOPMENT PLAN APPROVAL

DRAWING NAME:
MAP OF EXISTING CONDITIONS

JOB #: 1721 (DGB#3406-8)

© 2021 CENTERBROOK ARCHITECTS AND PLANNERS

DRAWN BY: MD	DATE: 06/30/2021
CHECKED BY: MA	SCALE: AS NOTED

SHEET:
SV1.00

M:\concord\p\3000-3499\3406-8 (Gary)\3406SB SV1.0.dwg 6/18/2021 - 11:36pm

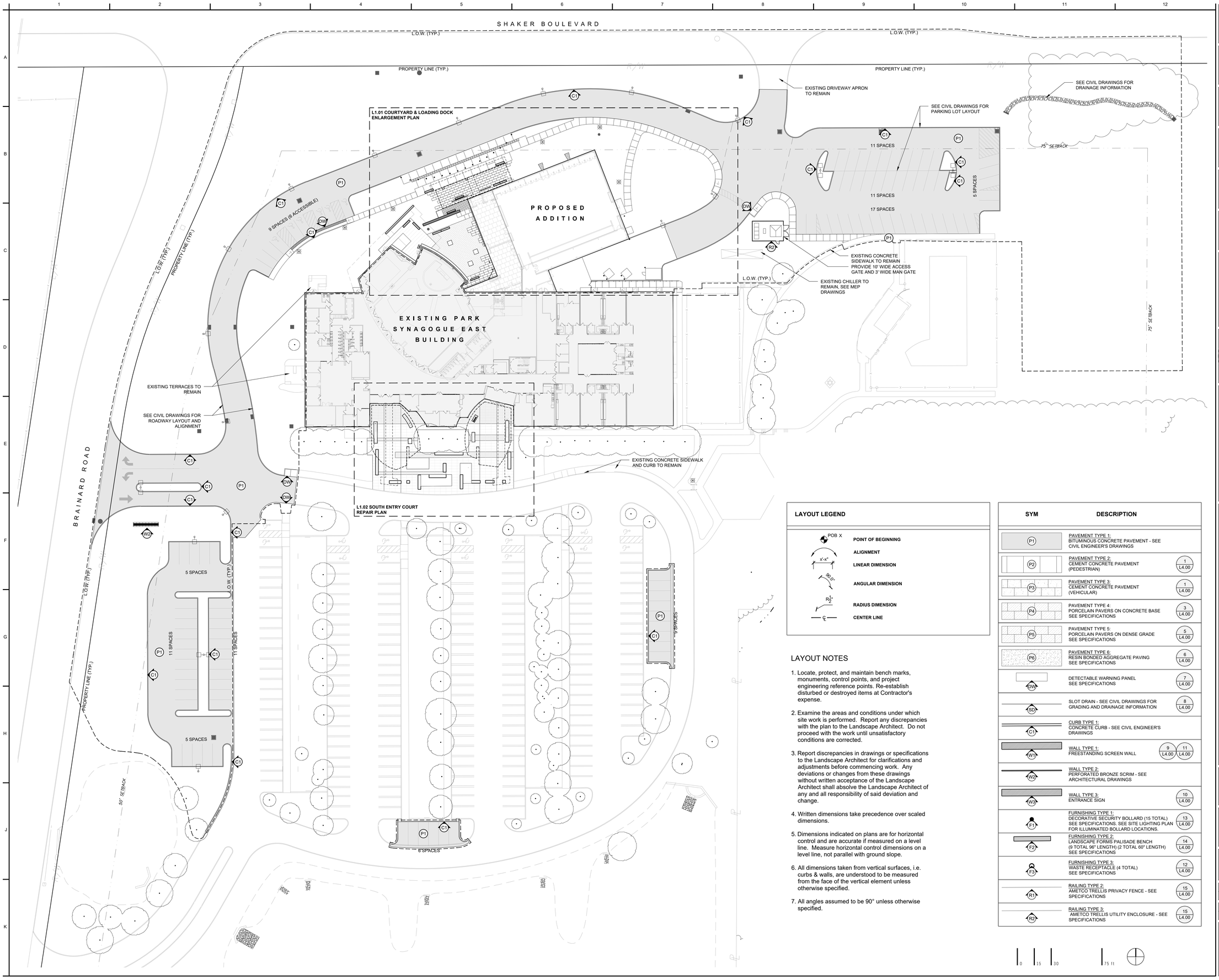

LAYOUT LEGEND

- POB X — POINT OF BEGINNING
- ALIGNMENT
- X'-X" — LINEAR DIMENSION
- 90.0° — ANGULAR DIMENSION
- R1½" — RADIUS DIMENSION
- CENTER LINE

LAYOUT NOTES

1. Locate, protect, and maintain bench marks, monuments, control points, and project engineering reference points. Re-establish disturbed or destroyed items at Contractor's expense.
2. Examine the areas and conditions under which site work is performed. Report any discrepancies with the plan to the Landscape Architect. Do not proceed with the work until unsatisfactory conditions are corrected.
3. Report discrepancies in drawings or specifications to the Landscape Architect for clarifications and adjustments before commencing work. Any deviations or changes from these drawings without written acceptance of the Landscape Architect shall absolve the Landscape Architect of any and all responsibility of said deviation and change.
4. Written dimensions take precedence over scaled dimensions.
5. Dimensions indicated on plans are for horizontal control and are accurate if measured on a level line. Measure horizontal control dimensions on a level line, not parallel with ground slope.
6. All dimensions taken from vertical surfaces, i.e. curbs & walls, are understood to be measured from the face of the vertical element unless otherwise specified.
7. All angles assumed to be 90° unless otherwise specified.

SYM	DESCRIPTION	
P1	PAVEMENT TYPE 1: BITUMINOUS CONCRETE PAVEMENT - SEE CIVIL ENGINEER'S DRAWINGS	
P2	PAVEMENT TYPE 2: CEMENT CONCRETE PAVEMENT (PEDESTRIAN)	1 L4.00
P3	PAVEMENT TYPE 3: CEMENT CONCRETE PAVEMENT (VEHICULAR)	1 L4.00
P4	PAVEMENT TYPE 4: PORCELAIN PAVERS ON CONCRETE BASE SEE SPECIFICATIONS	3 L4.00
P5	PAVEMENT TYPE 5: PORCELAIN PAVERS ON DENSE GRADE SEE SPECIFICATIONS	5 L4.00
P6	PAVEMENT TYPE 6: RESIN BONDED AGGREGATE PAVING SEE SPECIFICATIONS	6 L4.00
DW	DETECTABLE WARNING PANEL SEE SPECIFICATIONS	7 L4.00
SD	SLOT DRAIN - SEE CIVIL DRAWINGS FOR GRADING AND DRAINAGE INFORMATION	8 L4.00
C1	CURB TYPE 1: CONCRETE CURB - SEE CIVIL ENGINEER'S DRAWINGS	
W1	WALL TYPE 1: FREESTANDING SCREEN WALL	9 L4.00, 11 L4.00
W2	WALL TYPE 2: PERFORATED BRONZE SCRIM - SEE ARCHITECTURAL DRAWINGS	
W3	WALL TYPE 3: ENTRANCE SIGN	10 L4.00
F1	FURNISHING TYPE 1: DECORATIVE SECURITY BOLLARD (15 TOTAL) SEE SPECIFICATIONS. SEE SITE LIGHTING PLAN FOR ILLUMINATED BOLLARD LOCATIONS.	13 L4.00
F2	FURNISHING TYPE 2: LANDSCAPE FORMS PALISADE BENCH (9 TOTAL 96" LENGTH) (2 TOTAL 60" LENGTH) SEE SPECIFICATIONS	14 L4.00
F3	FURNISHING TYPE 3: WASTE RECEPTACLE (4 TOTAL) SEE SPECIFICATIONS	12 L4.00
R1	RAILING TYPE 2: AMETCO TRELLIS PRIVACY FENCE - SEE SPECIFICATIONS	15 L4.00
R2	RAILING TYPE 3: AMETCO TRELLIS UTILITY ENCLOSURE - SEE SPECIFICATIONS	15 L4.00

0 15 30 75 ft

Code Consultant
PHILIP R. SHERMAN, P.E.
P.O. BOX 216
ELKINS, NH 03233-0216
603-526-6190

Kitchen Consultant
RICCA DESIGN STUDIOS
515 WASHINGTON STREET
NORWELL, MA 02061
303-621-6327

Landscape Architect
STEPHEN STIMSON ASSOCIATES
288 NORFOLK STREET
CAMBRIDGE, MA 02139
617-876-8960

Civil Engineer
DONALD G. BOHNING & ASSOCIATES
7979 PUB PARKWAY
VALLEY VIEW, OH 44125
216-642-1130

Mechanical, Electrical, & Plumbing Engineer
KARPINSKI ASSOCIATES, INC.
3135 EUCLID AVENUE
CLEVELAND, OH 44115
216-391-3700

Structural Engineer
GILSANZ MURRAY STEFICEK, LLP
129 WEST 27TH STREET
NEW YORK, NY 10001
212-254-0030

CENTERBROOK
Architects and Planners, LLP
67 Main Street
Post Office Box 955
Centerbrook, Connecticut 06409-0955
Telephone 860.767.0175
Facsimile 860.767.8719

STATE OF OHIO — STEPHEN M. STIMSON — REGISTERED LANDSCAPE ARCHITECT

THE PARK SYNAGOGUE 27500 SHAKER BOULEVARD PEPPER PIKE, OHIO 44124

ISSUED:

No	Name	Date

PHASE: SITE DEVELOPMENT PLAN APPROVAL

DRAWING NAME: OVERALL SITE PLAN

JOB #: 1721

© 2021 CENTERBROOK ARCHITECTS AND PLANNERS

DRAWN BY: SC/RI | DATE: 06/30/2021
CHECKED BY: JW | SCALE:1" = 30'-0"

SHEET: L1.00

6/27/2023 9:09:49 AM

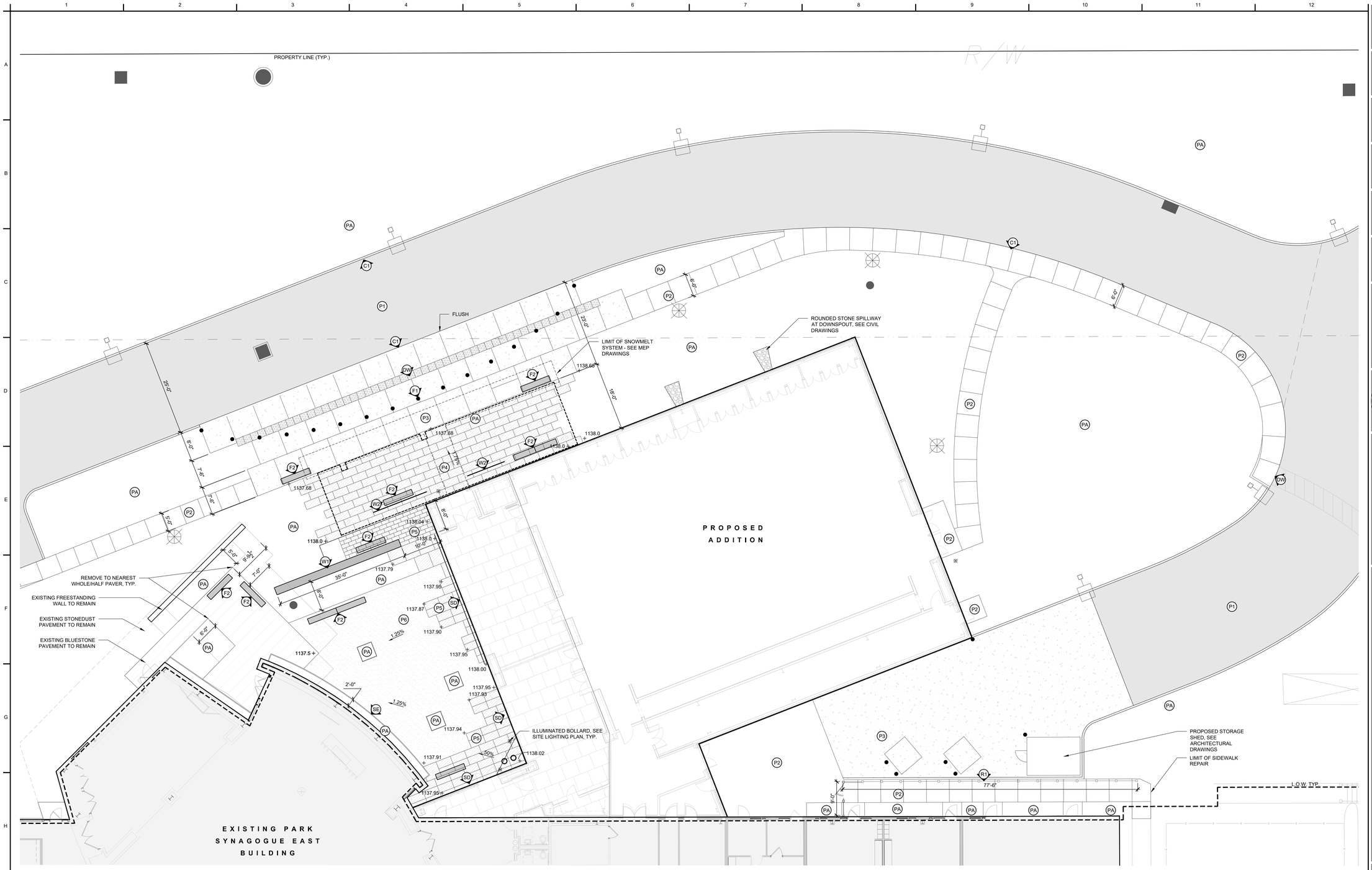

SYM	DESCRIPTION	DETAIL
P1	PAVEMENT TYPE 1: BITUMINOUS CONCRETE PAVEMENT - SEE CIVIL ENGINEER'S DRAWINGS	
P2	PAVEMENT TYPE 2: CEMENT CONCRETE PAVEMENT (PEDESTRIAN)	1 L4.00
P3	PAVEMENT TYPE 3: CEMENT CONCRETE PAVEMENT (VEHICULAR)	1 L4.00
P4	PAVEMENT TYPE 4: PORCELAIN PAVERS ON CONCRETE BASE SEE SPECIFICATIONS	3 L4.00
P5	PAVEMENT TYPE 5: PORCELAIN PAVERS ON DENSE GRADE SEE SPECIFICATIONS	5 L4.00
P6	PAVEMENT TYPE 6: RESIN BONDED AGGREGATE PAVING SEE SPECIFICATIONS	6 L4.00
DW	DETECTABLE WARNING PANEL SEE SPECIFICATIONS	7 L4.00

SYM	DESCRIPTION	DETAIL
SD	SLOT DRAIN - SEE CIVIL DRAWINGS FOR GRADING AND DRAINAGE INFORMATION	8 L4.00
C1	CURB TYPE 1: CONCRETE CURB - SEE CIVIL ENGINEER'S DRAWINGS	
W1	WALL TYPE 1: FREESTANDING SCREEN WALL	9 L4.00, 11 L4.00
W2	WALL TYPE 2: PERFORATED BRONZE SCRIM - SEE ARCHITECTURAL DRAWINGS	
W3	WALL TYPE 3: ENTRANCE SIGN	10 L4.00
F1	FURNISHING TYPE 1: DECORATIVE SECURITY BOLLARD (15 TOTAL) SEE SPECIFICATIONS. SEE SITE LIGHTING PLAN FOR ILLUMINATED BOLLARD LOCATIONS.	13 L4.00
F2	FURNISHING TYPE 2: LANDSCAPE FORMS PALISADE BENCH (9 TOTAL 96" LENGTH) (2 TOTAL 60" LENGTH) SEE SPECIFICATIONS	14 L4.00

SYM	DESCRIPTION	DETAIL
F3	FURNISHING TYPE 3: WASTE RECEPTACLE (4 TOTAL) SEE SPECIFICATIONS	12 L4.00
R1	RAILING TYPE 2: AMETCO TRELLIS PRIVACY FENCE - SEE SPECIFICATIONS	15 L4.00
R2	RAILING TYPE 3: AMETCO TRELLIS UTILITY ENCLOSURE - SEE SPECIFICATIONS	15 L4.00

LAYOUT LEGEND

- POB X — POINT OF BEGINNING
- X'-X" — ALIGNMENT
- LINEAR DIMENSION
- 90.0° — ANGULAR DIMENSION
- R1'-2" — RADIUS DIMENSION
- ℄ — CENTER LINE

LAYOUT NOTES

1. Locate, protect, and maintain bench marks, monuments, control points, and project engineering reference points. Re-establish disturbed or destroyed items at Contractor's expense.
2. Examine the areas and conditions under which site work is performed. Report any discrepancies with the plan to the Landscape Architect. Do not proceed with the work until unsatisfactory conditions are corrected.
3. Report discrepancies in drawings or specifications to the Landscape Architect for clarifications and adjustments before commencing work. Any deviations or changes from these drawings without written acceptance of the Landscape Architect shall absolve the Landscape Architect of any and all responsibility of said deviation and change.
4. Written dimensions take precedence over scaled dimensions.
5. Dimensions indicated on plans are for horizontal control and are accurate if measured on a level line. Measure horizontal control dimensions on a level line, not parallel with ground slope.
6. All dimensions taken from vertical surfaces, i.e. curbs & walls, are understood to be measured from the face of the vertical element unless otherwise specified.
7. All angles assumed to be 90° unless otherwise specified.

0 5 10 25 ft

N

Code Consultant
PHILIP R. SHERMAN, P.E.
P.O. BOX 216
ELKINS, NH 03233-0216
603-526-6190

Kitchen Consultant
RICCA DESIGN STUDIOS
515 WASHINGTON STREET
NORWELL, MA 02061
303-621-6327

Landscape Architect
STEPHEN STIMSON ASSOCIATES
288 NORFOLK STREET
CAMBRIDGE, MA 02139
617-876-8960

Civil Engineer
DONALD G. BOHNING & ASSOCIATES
7979 PUB PARKWAY
VALLEY VIEW, OH 44125
216-642-1130

Mechanical, Electrical, & Plumbing Engineer
KARPINSKI ASSOCIATES, INC.
3135 EUCLID AVENUE
CLEVELAND, OH 44115
216-391-3700

Structural Engineer
GILSANZ MURRAY STEFICEK, LLP
129 WEST 27TH STREET
NEW YORK, NY 10001
212-254-0030

CENTERBROOK
Architects and Planners, LLP
67 Main Street
Post Office Box 955
Centerbrook, Connecticut 06409-0955
Telephone 860.767.0175
Facsimile 860.767.8719

STATE OF OHIO — STEPHEN J. MAY — REGISTERED LANDSCAPE ARCHITECT

THE PARK SYNAGOGUE
27500 SHAKER BOULEVARD
PEPPER PIKE, OHIO 44124

ISSUED:

No	Name	Date

PHASE:
SITE DEVELOPMENT PLAN APPROVAL

DRAWING NAME:
COURTYARD & LOADING DOCK ENLARGEMENT PLAN

JOB #: 1721

© 2021 CENTERBROOK ARCHITECTS AND PLANNERS

DRAWN BY: SC/RI | DATE: 06/30/2021
CHECKED BY: JW | SCALE:1" = 10'-0"

SHEET:
L1.01

6/27/2021 9:59:49 AM

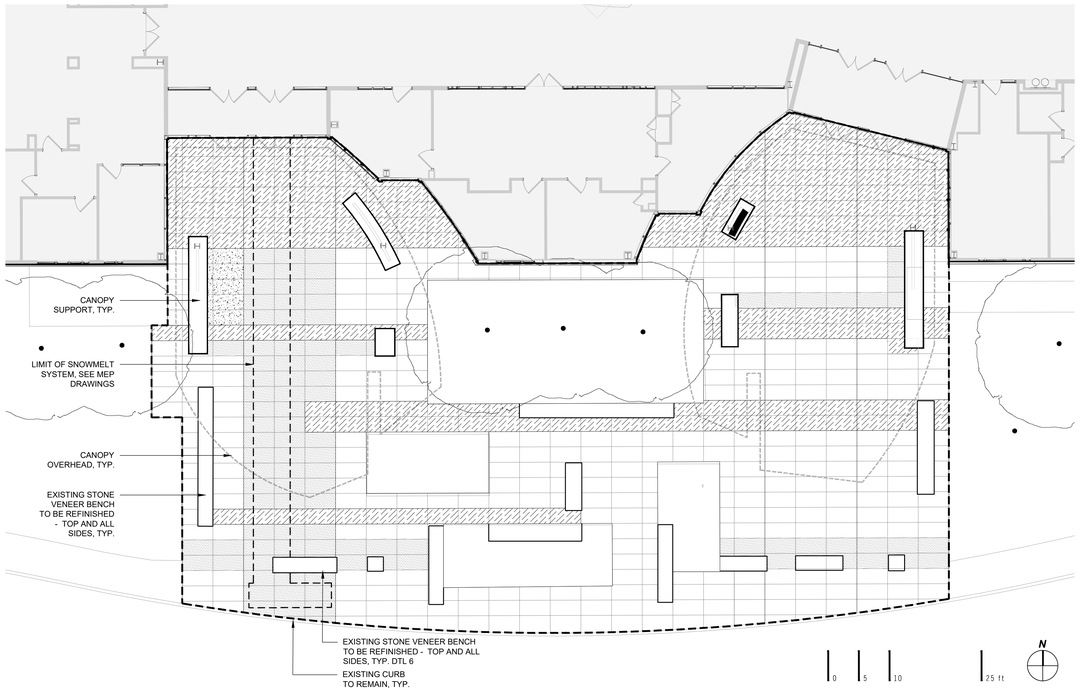

1 PROPOSED PAVEMENT REPLACEMENT
1"=10'

LEGEND

- EXISTING CONCRETE TO BE REPLACED WITH PAVERS, DTL 2
- EXISTING CONCRETE TO REMAIN
- EXISTING BLUE STONE TO BE REPLACED WITH PAVERS, CORE WEEP HOLES INTO SUBSLAB, DTL 3
- EXISTING CONCRETE TO BE REPLACED IN KIND, DTL 1
- PROPOSED LIMIT OF SNOWMELT SYSTEM, DTL 2
- LIMIT OF WORK

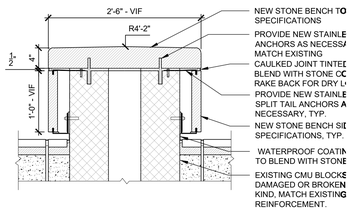

6 BENCH VENEER REPLACEMENT
1"=1'-0"

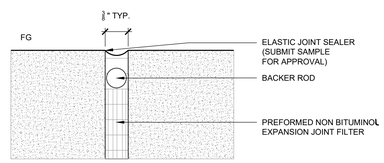

5 EXPANSION JOINT
1"=1'-0"

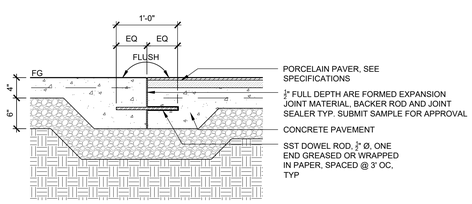

4 CONCRETE PAVEMENT AND GRANITE PAVERS JOINT
1"=1'-0"

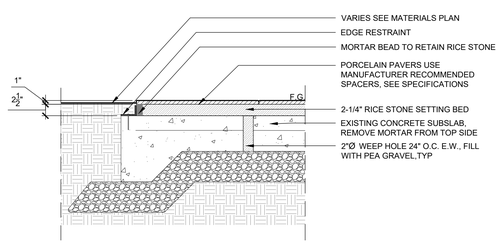

3 PORCELAIN PAVERS ON EXISTING SLAB
1"=1'-0"

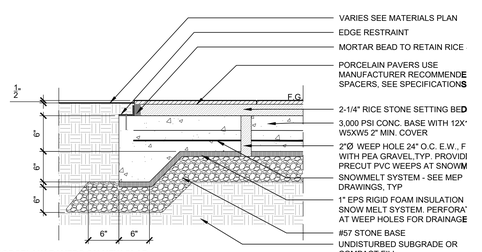

2 PORCELAIN PAVERS ON NEW SLAB
1"=1'-0"

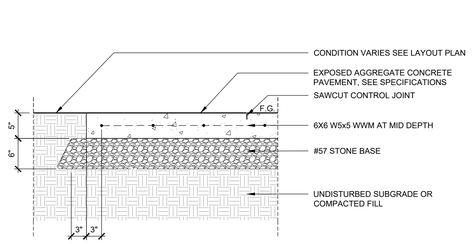

1 EXPOSED AGGREGATE CONCRETE PAVEMENT
1"=1'-0"

Code Consultant
PHILIP R. SHERMAN, P.E.
P.O. BOX 216
ELKINS, NH 03233-0216
603-526-6190

Kitchen Consultant
RICCA DESIGN STUDIOS
515 WASHINGTON STREET
NORWELL, MA 02061
303-621-6327

Landscape Architect
STEPHEN STIMSON ASSOCIATES
288 NORFOLK STREET
CAMBRIDGE, MA 02139
617-876-8960

Civil Engineer
DONALD G. BOHNING & ASSOCIATES
7979 PUB PARKWAY
VALLEY VIEW, OH 44125
216-642-1130

Mechanical, Electrical, & Plumbing Engineer
KARPINSKI ASSOCIATES, INC.
3135 EUCLID AVENUE
CLEVELAND, OH 44115
216-391-3700

Structural Engineer
GILSANZ MURRAY STEFICEK, LLP
129 WEST 27TH STREET
NEW YORK, NY 10001
212-254-0030

CENTERBROOK
Architects and Planners, LLP
67 Main Street
Post Office Box 955
Centerbrook, Connecticut 06409-0955
Telephone 860.767.0175
Facsimile 860.767.8719

STATE OF OHIO · STEPHEN · REGISTERED LANDSCAPE ARCHITECT

THE PARK SYNAGOGUE 27500 SHAKER BOULEVARD PEPPER PIKE, OHIO 44124

ISSUED:

No	Name	Date

PHASE:
SITE DEVELOPMENT PLAN APPROVAL

DRAWING NAME:
SOUTH ENTRY COURT REPAIR PLAN

JOB #: 1721

© 2021 CENTERBROOK ARCHITECTS AND PLANNERS

DRAWN BY: SC/RI | DATE: 06/30/2021
CHECKED BY: JW | SCALE:AS SHOWN

SHEET:
L1.02

6/27/2020 8:59:49 AM

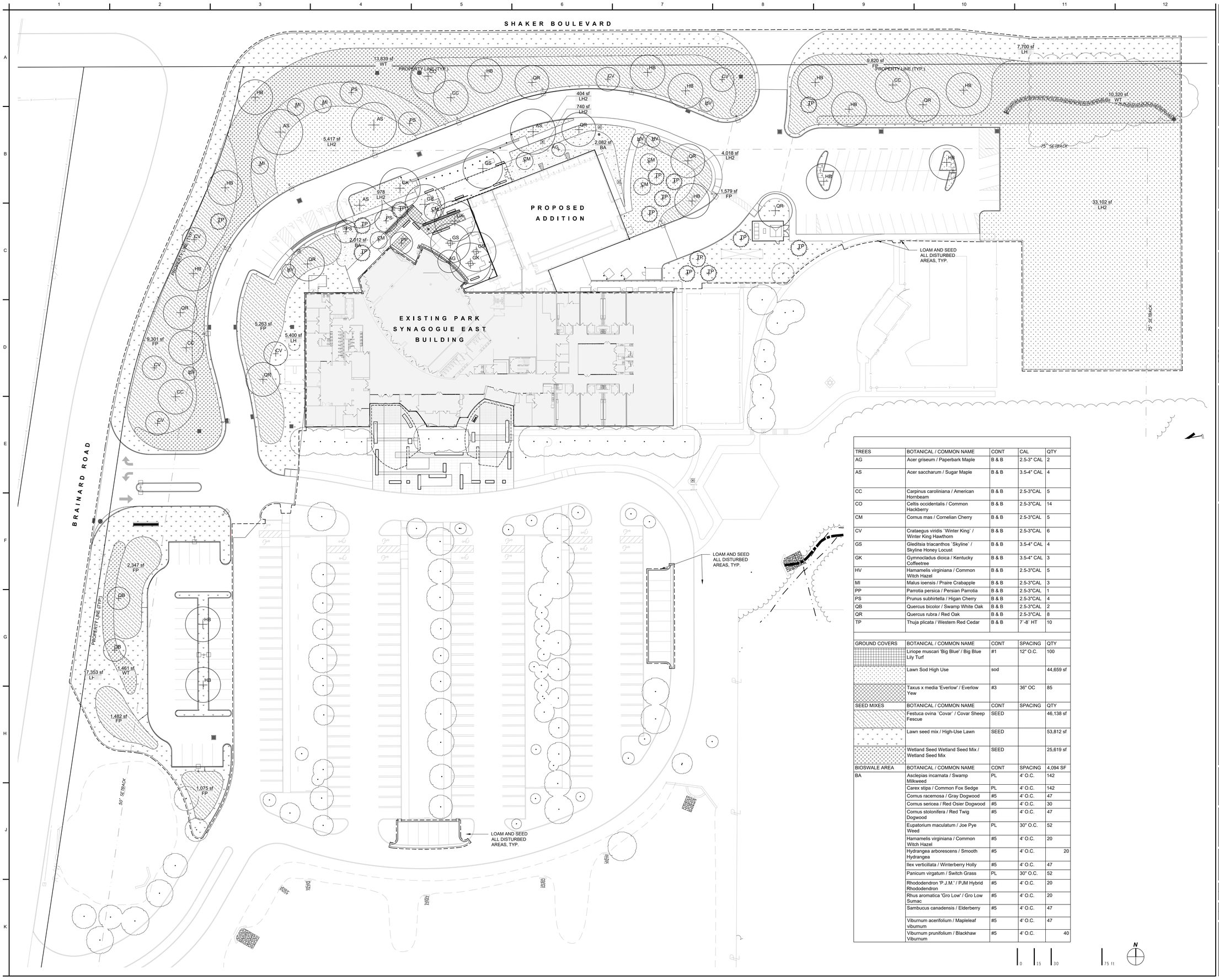

TREES	BOTANICAL / COMMON NAME	CONT	CAL	QTY
AG	Acer griseum / Paperbark Maple	B & B	2.5-3" CAL	2
AS	Acer saccharum / Sugar Maple	B & B	3.5-4" CAL	4
CC	Carpinus caroliniana / American Hornbeam	B & B	2.5-3"CAL	5
CO	Celtis occidentalis / Common Hackberry	B & B	2.5-3"CAL	14
CM	Cornus mas / Cornelian Cherry	B & B	2.5-3"CAL	5
CV	Crataegus viridis 'Winter King' / Winter King Hawthorn	B & B	2.5-3"CAL	6
GS	Gleditsia triacanthos `Skyline` / Skyline Honey Locust	B & B	3.5-4" CAL	4
GK	Gymnocladus dioica / Kentucky Coffeetree	B & B	3.5-4" CAL	3
HV	Hamamelis virginiana / Common Witch Hazel	B & B	2.5-3"CAL	5
MI	Malus ioensis / Praire Crabapple	B & B	2.5-3"CAL	3
PP	Parrotia persica / Persian Parrotia	B & B	2.5-3"CAL	1
PS	Prunus subhirtella / Higan Cherry	B & B	2.5-3"CAL	4
QB	Quercus bicolor / Swamp White Oak	B & B	2.5-3"CAL	2
QR	Quercus rubra / Red Oak	B & B	2.5-3"CAL	8
TP	Thuja plicata / Western Red Cedar	B & B	7`-8` HT	10

GROUND COVERS	BOTANICAL / COMMON NAME	CONT	SPACING	QTY
	Liriope muscari 'Big Blue' / Big Blue Lily Turf	#1	12" O.C.	100
	Lawn Sod High Use	sod		44,659 sf
	Taxus x media 'Everlow' / Everlow Yew	#3	36" OC	85
SEED MIXES	BOTANICAL / COMMON NAME	CONT	SPACING	QTY
	Festuca ovina `Covar` / Covar Sheep Fescue	SEED		46,138 sf
	Lawn seed mix / High-Use Lawn	SEED		53,812 sf
	Wetland Seed Wetland Seed Mix / Wetland Seed Mix	SEED		25,619 sf
BIOSWALE AREA	BOTANICAL / COMMON NAME	CONT	SPACING	4,094 SF
BA	Asclepias incarnata / Swamp Milkweed	PL	4' O.C.	142
	Carex stipa / Common Fox Sedge	PL	4' O.C.	142
	Cornus racemosa / Gray Dogwood	#5	4' O.C.	47
	Cornus sericea / Red Osier Dogwood	#5	4' O.C.	30
	Cornus stolonifera / Red Twig Dogwood	#5	4' O.C.	47
	Eupatorium maculatum / Joe Pye Weed	PL	30" O.C.	52
	Hamamelis virginiana / Common Witch Hazel	#5	4' O.C.	20
	Hydrangea arborescens / Smooth Hydrangea	#5	4' O.C.	20
	Ilex verticillata / Winterberry Holly	#5	4' O.C.	47
	Panicum virgatum / Switch Grass	PL	30" O.C.	52
	Rhododendron 'P.J.M.' / PJM Hybrid Rhododendron	#5	4' O.C.	20
	Rhus aromatica 'Gro Low' / Gro Low Sumac	#5	4' O.C.	20
	Sambucus canadensis / Elderberry	#5	4' O.C.	47
	Viburnum acerifolium / Mapleleaf viburnum	#5	4' O.C.	47
	Viburnum prunifolium / Blackhaw Viburnum	#5	4' O.C.	40

Code Consultant
PHILIP R. SHERMAN, P.E.
P.O. BOX 216
ELKINS, NH 03233-0216
603-526-6190

Kitchen Consultant
RICCA DESIGN STUDIOS
515 WASHINGTON STREET
NORWELL, MA 02061
303-621-6327

Landscape Architect
STEPHEN STIMSON ASSOCIATES
288 NORFOLK STREET
CAMBRIDGE, MA 02139
617-876-8960

Civil Engineer
DONALD G. BOHNING & ASSOCIATES
7979 PUB PARKWAY
VALLEY VIEW, OH 44125
216-642-1130

Mechanical, Electrical, & Plumbing Engineer
KARPINSKI ASSOCIATES, INC.
3135 EUCLID AVENUE
CLEVELAND, OH 44115
216-391-3700

Structural Engineer
GILSANZ MURRAY STEFICEK, LLP
129 WEST 27TH STREET
NEW YORK, NY 10001
212-254-0030

CENTERBROOK
Architects and Planners, LLP
67 Main Street
Post Office Box 955
Centerbrook, Connecticut 06409-0955
Telephone 860.767.0175
Facsimile 860.767.8719

STATE OF OHIO · STEPHEN · DAY · REGISTERED LANDSCAPE ARCHITECT

THE PARK SYNAGOGUE 27500 SHAKER BOULEVARD PEPPER PIKE, OHIO 44124

ISSUED:

No	Name	Date

PHASE:
SITE DEVELOPMENT PLAN APPROVAL

DRAWING NAME:
OVERALL SITE PLANTING PLAN

JOB #: 1721

© 2021 CENTERBROOK ARCHITECTS AND PLANNERS

DRAWN BY: SC/RI | DATE: 06/30/2021
CHECKED BY: JW | SCALE:1" = 30'-0"

SHEET:
L2.00

6/17/2020 8:59:48 AM

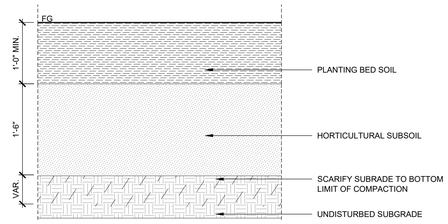

12 TREE PLANTING BED SOIL
1"=1'-0"

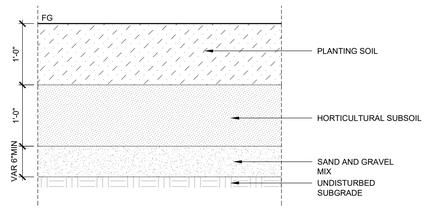

11 BIO-RETENTION PLANTING BED SOIL
1"=1'-0"

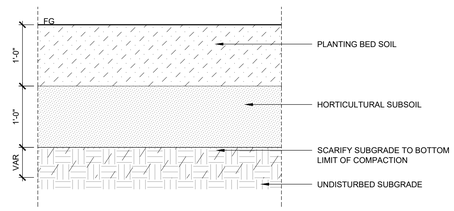

10 PLANTING BED SOIL PROFILE
1"=1'-0"

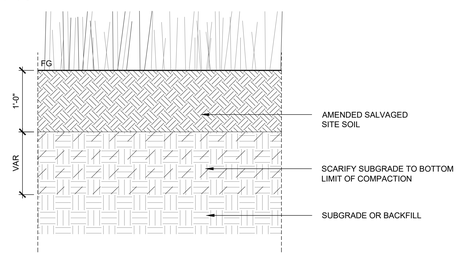

9 MEADOW SOIL PROFILE
1"=1'-0"

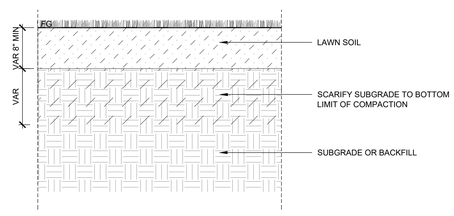

8 LAWN SOIL PROFILE
1"=1'-0"

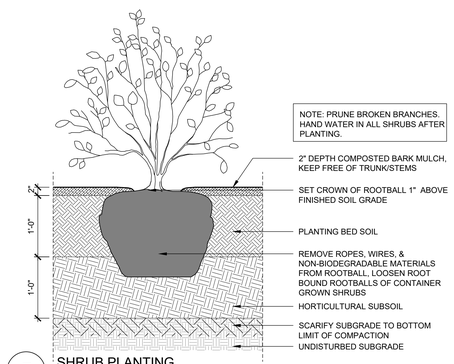

7 SHRUB PLANTING
1"=1'-0"

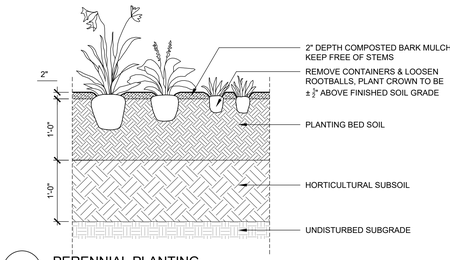

6 PERENNIAL PLANTING
1"=1'-0"

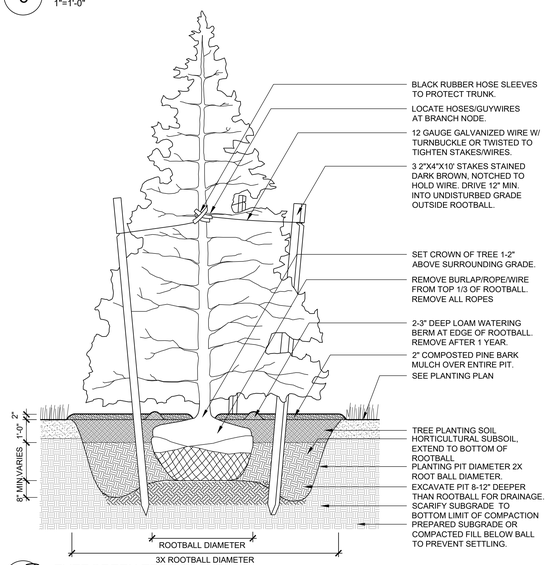

5 EVERGREEN TREE PLANTING
3/4"=1'-0"

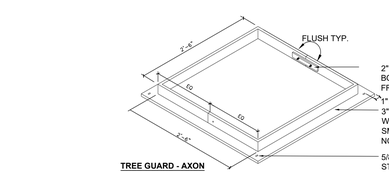

TREE GUARD - AXON

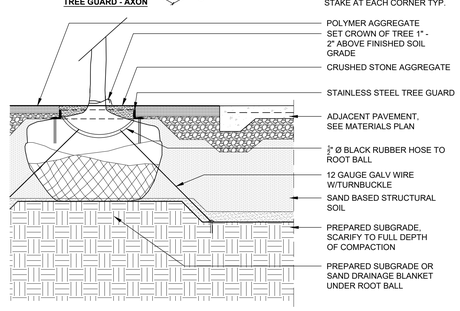

4 TREE PLANTING IN PAVING
1/2"=1'-0"

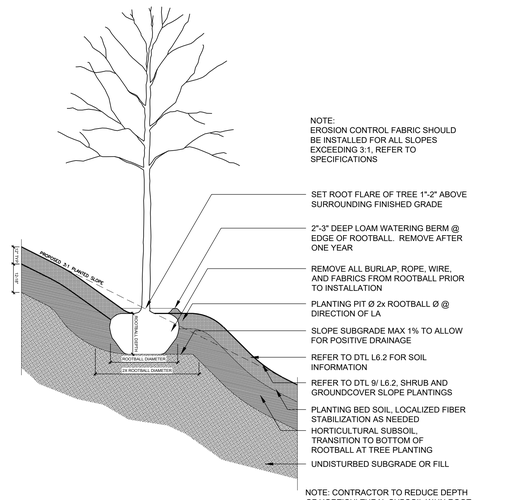

3 TREE PLANTING IN SLOPE
1"=1'-0"

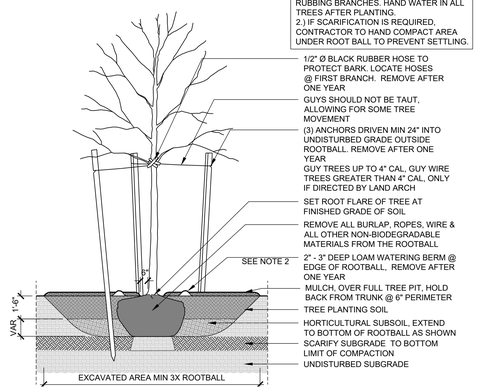

2 TREE PLANTING
1"=1'-0"

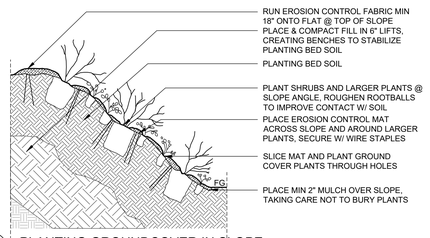

1 PLANTING GROUNDCOVER IN SLOPE
1"=1'-0"

Code Consultant
PHILIP R. SHERMAN, P.E.
P.O. BOX 216
ELKINS, NH 03233-0216
603-526-6190

Kitchen Consultant
RICCA DESIGN STUDIOS
515 WASHINGTON STREET
NORWELL, MA 02061
303-621-6327

Landscape Architect
STEPHEN STIMSON ASSOCIATES
288 NORFOLK STREET
CAMBRIDGE, MA 02139
617-876-8960

Civil Engineer
DONALD G. BOHNING & ASSOCIATES
7979 PUB PARKWAY
VALLEY VIEW, OH 44125
216-642-1130

Mechanical, Electrical, & Plumbing Engineer
KARPINSKI ASSOCIATES, INC.
3135 EUCLID AVENUE
CLEVELAND, OH 44115
216-391-3700

Structural Engineer
GILSANZ MURRAY STEFICEK, LLP
129 WEST 27TH STREET
NEW YORK, NY 10001
212-254-0030

CENTERBROOK
Architects and Planners, LLP
67 Main Street
Post Office Box 955
Centerbrook, Connecticut 06409-0955
Telephone 860.767.0175
Facsimile 860.767.8719

STATE OF OHIO · STEVEN C. RIDDLE · REGISTERED LANDSCAPE ARCHITECT

THE PARK SYNAGOGUE
27500 SHAKER BOULEVARD
PEPPER PIKE, OHIO 44124

ISSUED:

No	Name	Date

PHASE:
SITE DEVELOPMENT PLAN APPROVAL

DRAWING NAME:
SOIL PROFILES AND PLANTING DETAILS

JOB #: 1721

© 2021 CENTERBROOK ARCHITECTS AND PLANNERS

DRAWN BY: SC/RI
DATE: 06/30/2021
CHECKED BY: JW
SCALE: AS SHOWN

SHEET:
L2.01

8/27/2021 9:59:49 AM

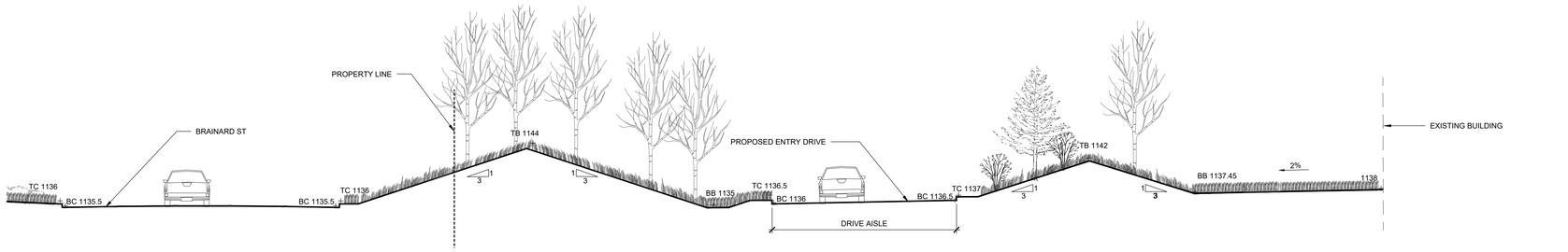

4 BERM SECTION @ BRAINARD
1/8"=1'-0"

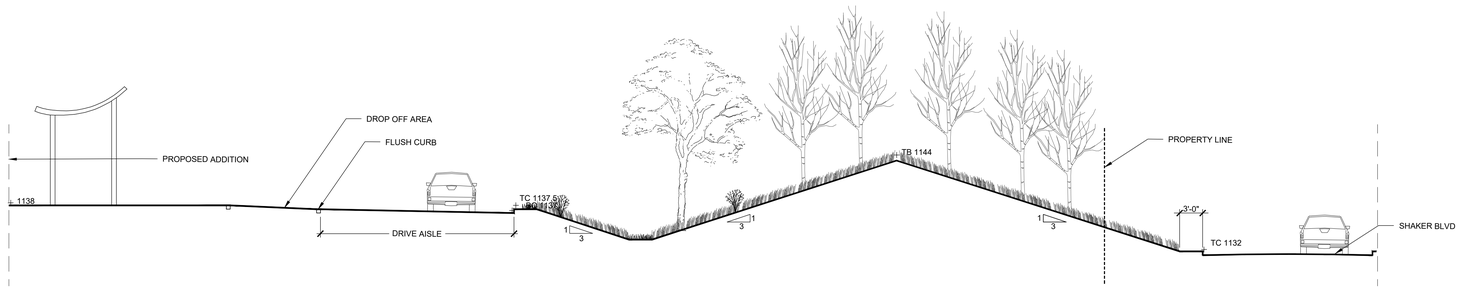

3 BERM SECTION @ SHAKER BLVD WEST
1/8"=1'-0"

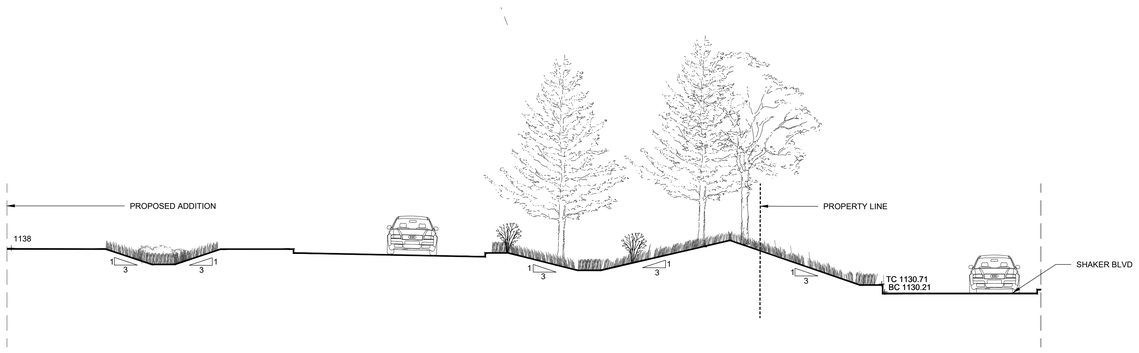

2 BERM SECTION @ SHAKER BLVD EAST
1/8"=1'-0"

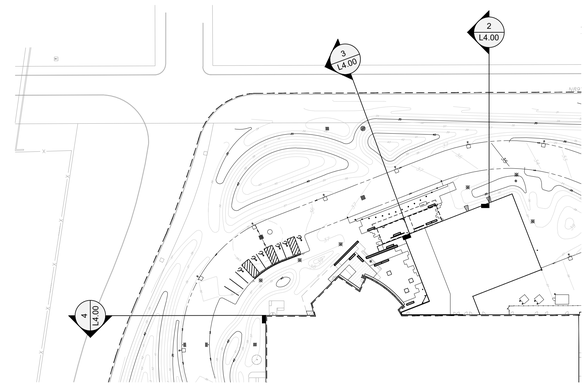

1 CONTEXT PLAN
1/64"=1'-0"

Code Consultant
PHILIP R. SHERMAN, P.E.
P.O. BOX 216
ELKINS, NH 03233-0216
603-526-6190

Kitchen Consultant
RICCA DESIGN STUDIOS
515 WASHINGTON STREET
NORWELL, MA 02061
303-621-6327

Landscape Architect
STEPHEN STIMSON ASSOCIATES
288 NORFOLK STREET
CAMBRIDGE, MA 02139
617-876-8960

Civil Engineer
DONALD G. BOHNING & ASSOCIATES
7979 PUB PARKWAY
VALLEY VIEW, OH 44125
216-642-1130

Mechanical, Electrical, & Plumbing Engineer
KARPINSKI ASSOCIATES, INC.
3135 EUCLID AVENUE
CLEVELAND, OH 44115
216-391-3700

Structural Engineer
GILSANZ MURRAY STEFICEK, LLP
129 WEST 27TH STREET
NEW YORK, NY 10001
212-254-0030

CENTERBROOK
Architects and Planners, LLP
67 Main Street
Post Office Box 955
Centerbrook, Connecticut 06409-0955
Telephone 860.767.0175
Facsimile 860.767.8719

THE PARK SYNAGOGUE
27500 SHAKER BOULEVARD
PEPPER PIKE, OHIO 44124

ISSUED:

No	Name	Date

PHASE:
SITE DEVELOPMENT PLAN APPROVAL

DRAWING NAME:
SITE SECTIONS

JOB #: 1721

© 2021 CENTERBROOK ARCHITECTS AND PLANNERS

DRAWN BY: SC/RI	DATE: 06/30/2021
CHECKED BY: JW	SCALE:AS SHOWN

SHEET:
L3.00

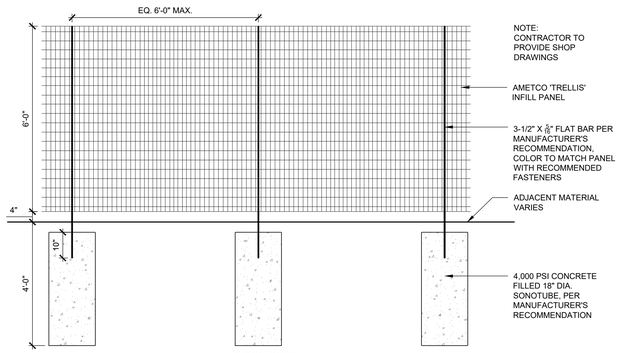

TYPICAL PANEL

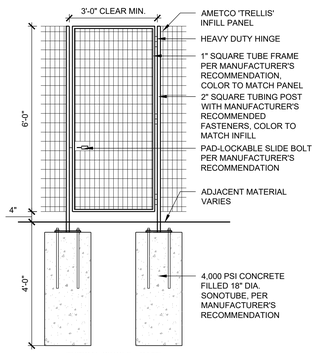

TYPICAL SINGLE - GATE

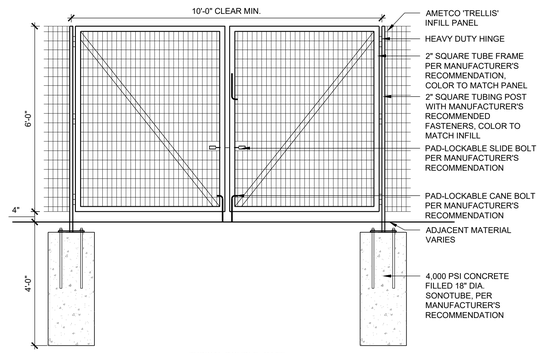

TYPICAL DOUBLE- GATE

15 UTILITY ENCLOSURE & PRIVACY FENCE
1"=1'-0"

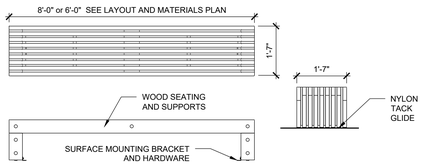

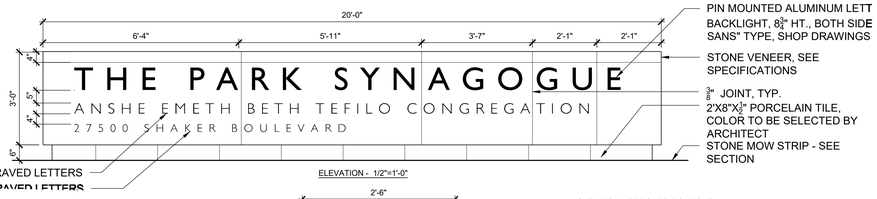

ELEVATION - 1/2"=1'-0"

14 LANDSCAPE FORMS PALISADE BENCH
1"=1'-0"

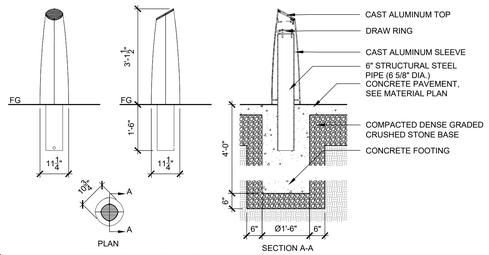

13 ILLUMINATED SECURITY BOLLARD
1"=1'-0"

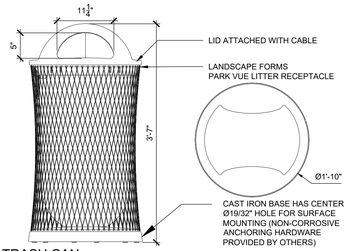

12 TRASH CAN
1"=1'-0"

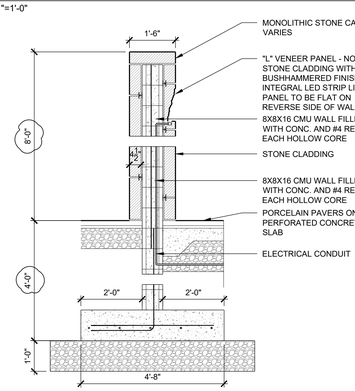

11 FREESTANDING SCREEN WALL / ENTRANCE SIGN - SECTION
1/2"=1'-0"

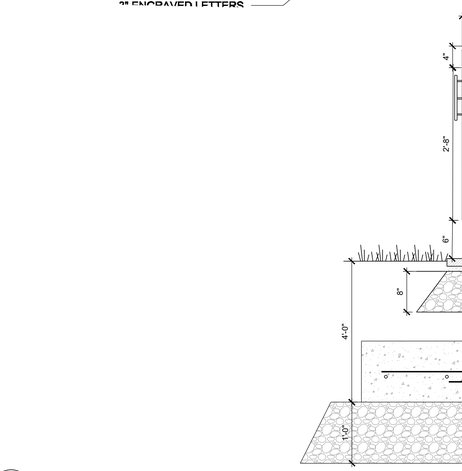

SECTION - 1"=1'-0"

10 RELOCATED ENTRY SIGN
AS SHOWN

NOTES:
CONTRACTOR TO PROVIDE SHOP DRAWINGS.

"L" VENEER PANEL TO BE NOTCHED ON COURTYARD SIDE AND BE 4.5" THICK FLAT PANEL ON REVERSE SIDE.

WALL ELEVATION TO BE MIRRORED ON REVERSE SIDE

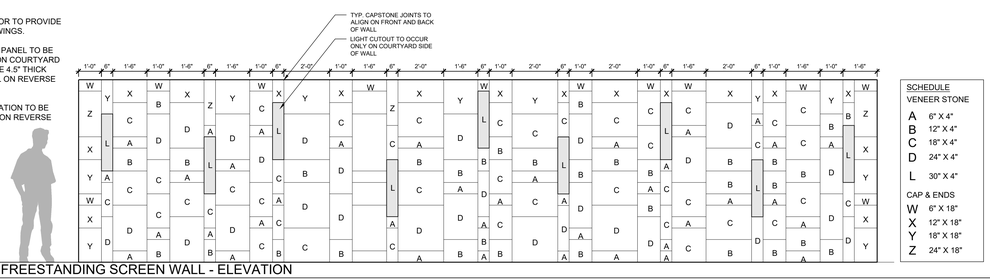

SCHEDULE VENEER STONE	
A	6" X 4"
B	12" X 4"
C	18" X 4"
D	24" X 4"
L	30" X 4"
CAP & ENDS	
W	6" X 18"
X	12" X 18"
Y	18" X 18"
Z	24" X 18"

9 FREESTANDING SCREEN WALL - ELEVATION
3/8"=1'-0"

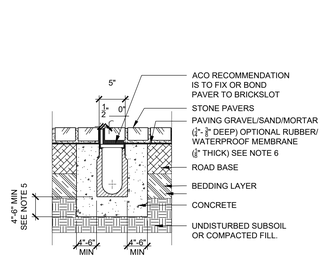

8 SLOT DRAIN
1"=1'-0"

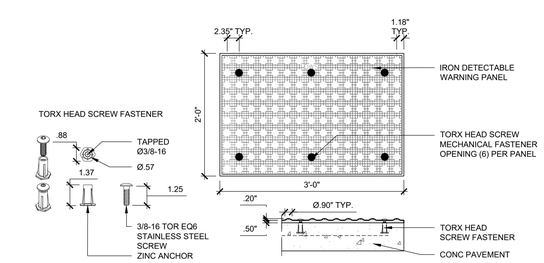

7 DETECTABLE WARNING PANEL
1"=1'-0"

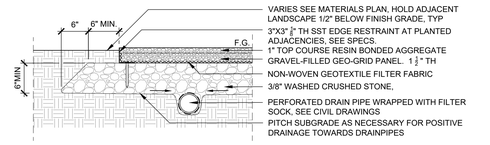

6 BONDED AGGREGATE PAVEMENT
1"=1'-0"

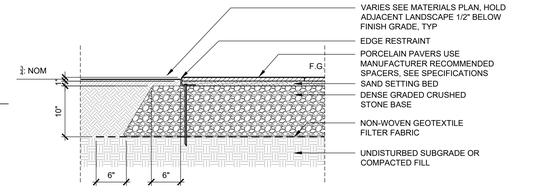

5 PORCELAIN PAVERS ON DENSE GRADE BASE
1"=1'-0"

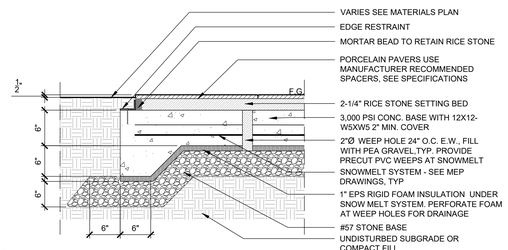

3 PORCELAIN PAVERS ON CONCRETE BASE
1"=1'-0"

NOTE: VEHICULAR CONCRETE TO HAVE THICKENED PROFILE ADJACENT TO VEHICULAR TRAVEL LANE

	DEPTH	
SURFACE	A	B
PEDESTRIAN (P2,P3)	4"	8"
VEHICULAR (P7)	6"	12"

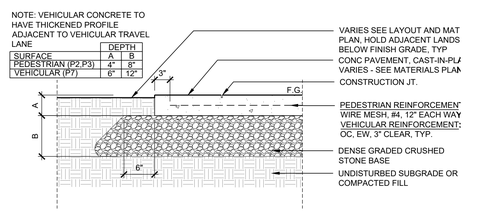

1 CONCRETE PAVEMENT
1"=1'-0"

Code Consultant
PHILIP R. SHERMAN, P.E.
P.O. BOX 216
ELKINS, NH 03233-0216
603-526-6190

Kitchen Consultant
RICCA DESIGN STUDIOS
515 WASHINGTON STREET
NORWELL, MA 02061
303-621-6327

Landscape Architect
STEPHEN STIMSON ASSOCIATES
288 NORFOLK STREET
CAMBRIDGE, MA 02139
617-876-8960

Civil Engineer
DONALD G. BOHNING & ASSOCIATES
7979 PUB PARKWAY
VALLEY VIEW, OH 44125
216-642-1130

Mechanical, Electrical, & Plumbing Engineer
KARPINSKI ASSOCIATES, INC.
3135 EUCLID AVENUE
CLEVELAND, OH 44115
216-391-3700

Structural Engineer
GILSANZ MURRAY STEFICEK, LLP
129 WEST 27TH STREET
NEW YORK, NY 10001
212-254-0030

CENTERBROOK
Architects and Planners, LLP
67 Main Street
Post Office Box 955
Centerbrook, Connecticut 06409-0955
Telephone 860.767.0175
Facsimile 860.767.8719

STATE OF OHIO · STEPHEN · STIMSON · REGISTERED LANDSCAPE ARCHITECT

THE PARK SYNAGOGUE
27500 SHAKER BOULEVARD
PEPPER PIKE, OHIO 44124

ISSUED:

No	Name	Date

PHASE:
SITE DEVELOPMENT PLAN APPROVAL

DRAWING NAME:
SITE DETAILS

JOB #: 1721

© 2021 CENTERBROOK ARCHITECTS AND PLANNERS

DRAWN BY: SC/RI
DATE: 06/30/2021
CHECKED BY: JW
SCALE:AS SHOWN

SHEET:
L4.00

6/27/2023 9:29:48 AM

GENERAL NOTES - FLOOR PLAN

1. DIMENSIONS NOTED AS "EQUAL" OR "EQ" WITHIN A ROOM REFER TO A DISTANCE RELATIONSHIP CONTAINED ONLY IN THAT ROOM AT AN OPPOSING OR PARALLEL WALL UNLESS NOTED OTHERWISE.

2 TYPICAL CODE-REQUIRED MANEUVERING CLEARANCES FOR ACCESSIBILITY AT DOORS IS SHOWN IN THE CODE PLANS LEGEND. THE REQUIRED MANEUVERING CLEARANCES FOR EACH DOOR ARE SHOWN ON THE FLOOR PLAN OR LAYOUT DRAWINGS. THE CONTRACTOR SHALL BE FULLY RESPONSIBLE TO COORDINATE THE REQUIREMENT FOR MANEUVERING CLEARANCES WITH SUBCONTRACTORS, VENDORS AND INSTALLERS AND VERIFY THAT THE INSTALLED WORK WILL PROVIDE THE REQUIRED MANEUVERING CLEARANCES. REPORT ALL DEVIATIONS FROM THE MANEUVERING CLEARANCE REQUIREMENTS TO THE ARCHITECT. DO NOT PROCEED WITH THE INSTALLATION OF ANY WORK ENCROACHING ON THE REQUIRED MANEUVERING CLEARANCES UNTIL THE ISSUE HAS BEEN RESOLVED WITH THE ARCHITECT. MAKE NECESSARY CORRECTIONS.

3. DIMENSIONS SHOWN ON ARCHITECTURAL FLOOR PLANS AND ENLARGED PLAN DETAILS ARE TO FACE OF STUD, TO FACE OF MASONRY OR TO CENTER LINE OF COLUMN UNLESS OTHERWISE NOTED.

4. ENSURE FINISH SURFACES ARE FLUSH AND SEAMLESS WHERE PARTITIONS AND/OR FURRING ARE COPLANAR.

5. ALL PIPING, CONDUITS AND RELATED MECHANICAL AND ELECTRICAL ITEMS SHALL BE CONCEALED WITHIN PARTITION WALL ASSEMBLY IN FINISHED AREA, U.N.O.;

6. PROVIDE BACKING/BLOCKING TO SUPPORT ALL WALL MOUNTED ITEMS.

7 ALL MECHANICAL PADS TO BE 4" HIGH MINIMUM. U.N.O SIZE OF PAD TO BE VERIFIED BY CONTRACTOR.

8 PITCH SLABS (AND OTHER FLOORS) TO FLOOR DRAINS, TYP.

FLOOR PLAN LEGEND

- AREA OF EXISTING CONSTRUCTION TO REMAIN
- EXISTING CONSTRUCTION
- NEW CONSTRUCTION
- BUILT-IN MILLWORK.
- ALTERNATE - SEE SPECIFICATION AND NOTES FOR ADDITIONAL INFORMATION.
- EXISTING DOOR TO REMAIN
- NEW DOOR, SEE DOOR SCHEDULE

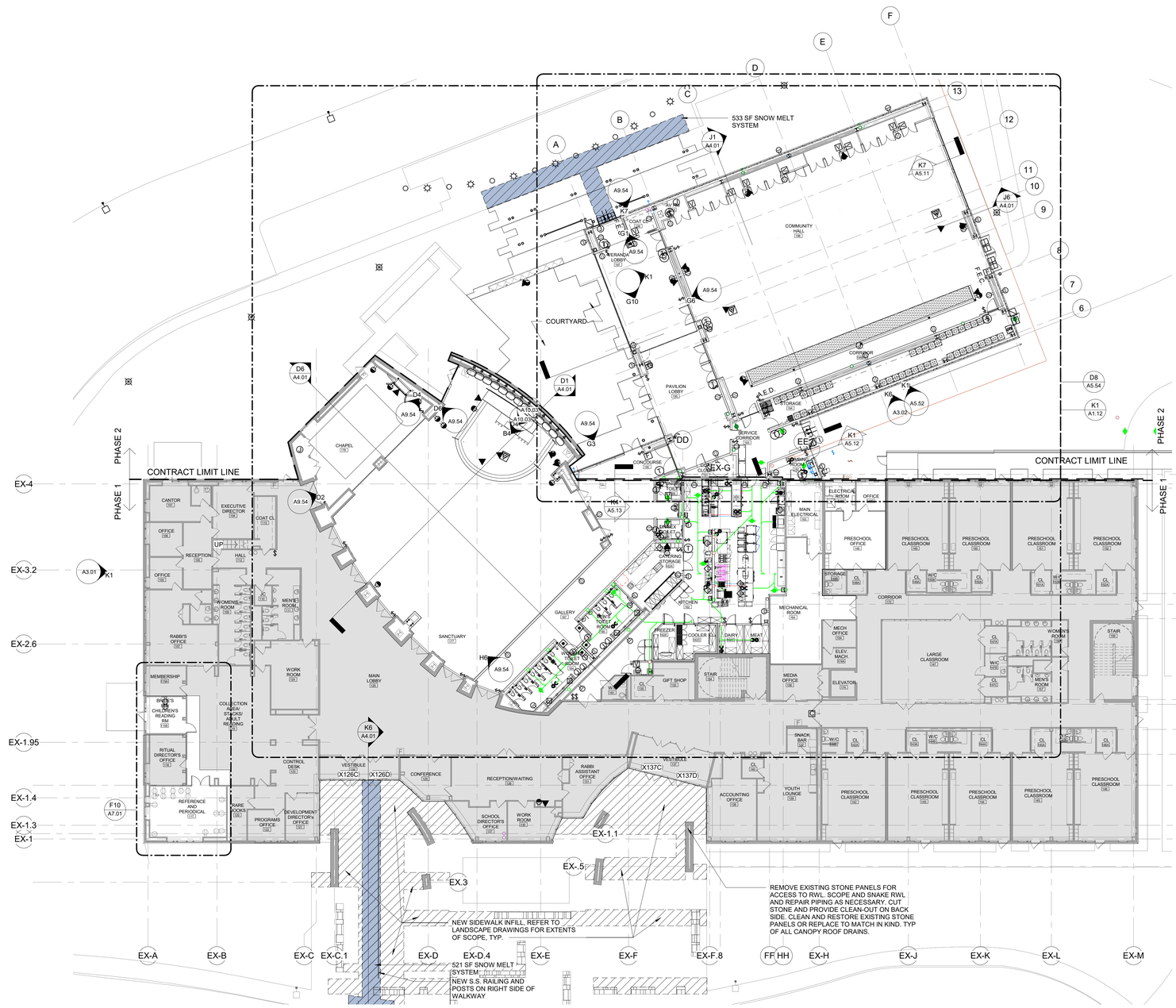

K2 OVERALL FIRST FLOOR PLAN
1/16" = 1'-0"

0 8 16 32

N KEY PLAN

Code Consultant
P. R. SHERMAN, P.E.
P.O. BOX 216
ELKINS, NH 03233-0216
603-526-6190

Kitchen Consultant
RICCA DESIGN STUDIOS
515 WASHINGTON STREET
NORWELL, MA 02061
303-621-6327

Landscape Architect
STIMSON
288 NORFOLK STREET
CAMBRIDGE, MA 02139
617 876 8960

Civil Engineer
DONALD G. BOHNING & ASSOCIATES
7979 PUB PARKWAY
VALLEY VIEW, OH 44125
216-642-1130

Mechanical, Electrical, & Plumbing Engineer
KARPINSKI ENGINEERING
3135 EUCLID AVENUE
CLEVELAND, OH 44115
216-391-3700

Structural Engineer
GILSANZ MURRAY STEFICEK, LLP
129 WEST 27TH STREET
NEW YORK, NY 10001
212-254-0030

CENTERBROOK
Architects and Planners, LLP
67 Main Street
Post Office Box 955
Centerbrook, Connecticut 06409-0955
Telephone 860.767.0175
Facsimile 860.767.8719

STATE OF OHIO — MICHAEL SCHWARTZ — No. 12533 — REGISTERED ARCHITECT

THE PARK SYNAGOGUE 27500 SHAKER BOULEVARD PEPPER PIKE, OHIO 44124

ISSUED:

No	Name	Date

PHASE:
SITE DEVELOPMENT PLAN APPROVAL

DRAWING NAME:
OVERALL FIRST FLOOR PLAN

JOB #: 1721

© 2021 CENTERBROOK ARCHITECTS AND PLANNERS

DRAWN BY: KL/MGM	DATE: 06/30/2021
CHECKED BY: MS	SCALE:As indicated

SHEET:
A1.11

C:\Revit Local Files\1721 Park Synagogue East Building A20 6/17/2021 5:23:51 PM
Ceetrp_gmurray@centerbrook.com.rvt



K1 ENLARGED SANCTUARY AND PAVILION PLAN
1/8" = 1'-0"

© Ellerbe Locus Files\721 Park Synagogue East Building\A20 6/17/2021 5:24:43 PM
Cuellar.garrett@ellerbelocus.com

Code Consultant
P. R. SHERMAN, P.E.
P.O. BOX 216
ELKINS, NH 03233-0216
603-526-6190

Kitchen Consultant
RICCA DESIGN STUDIOS
515 WASHINGTON STREET
NORWELL, MA 02061
303-621-6327

Landscape Architect
STIMSON
288 NORFOLK STREET
CAMBRIDGE, MA 02139
617 876 8960

Civil Engineer
DONALD G. BOHNING & ASSOCIATES
7979 PUB PARKWAY
VALLEY VIEW, OH 44125
216-642-1130

Mechanical, Electrical, & Plumbing Engineer
KARPINSKI ENGINEERING
3135 EUCLID AVENUE
CLEVELAND, OH 44115
216-391-3700

Structural Engineer
GILSANZ MURRAY STEFICEK, LLP
129 WEST 27TH STREET
NEW YORK, NY 10001
212-254-0030

CENTERBROOK
Architects and Planners, LLP
67 Main Street
Post Office Box 955
Centerbrook, Connecticut 06409-0955
Telephone 860.767.0175
Facsimile 860.767.8719

STATE OF OHIO — No. 12533 — REGISTERED ARCHITECT

THE PARK SYNAGOGUE 27500 SHAKER BOULEVARD PEPPER PIKE, OHIO 44124

ISSUED:

No	Name	Date

PHASE:
SITE DEVELOPMENT PLAN APPROVAL

DRAWING NAME:
ENLARGED SANCTUARY AND PAVILION PLAN

JOB #: 1721

© 2021 CENTERBROOK ARCHITECTS AND PLANNERS

DRAWN BY: KL/MGM | DATE: 06/30/2021
CHECKED BY: MS | SCALE: 1/8" = 1'-0"

SHEET:
A1.12

GENERAL NOTES - FLOOR PLAN

1. DIMENSIONS NOTED AS "EQUAL" OR "EQ" WITHIN A ROOM REFER TO A DISTANCE RELATIONSHIP CONTAINED ONLY IN THAT ROOM AT AN OPPOSING OR PARALLEL WALL UNLESS NOTED OTHERWISE.

2 TYPICAL CODE-REQUIRED MANEUVERING CLEARANCES FOR ACCESSIBILITY AT DOORS IS SHOWN IN THE CODE PLANS LEGEND. THE REQUIRED MANEUVERING CLEARANCES FOR EACH DOOR ARE SHOWN ON THE FLOOR PLAN OR LAYOUT DRAWINGS. THE CONTRACTOR SHALL BE FULLY RESPONSIBLE TO COORDINATE THE REQUIREMENT FOR MANEUVERING CLEARANCES WITH SUBCONTRACTORS, VENDORS AND INSTALLERS AND VERIFY THAT THE INSTALLED WORK WILL PROVIDE THE REQUIRED MANEUVERING CLEARANCES. REPORT ALL DEVIATIONS FROM THE MANEUVERING CLEARANCE REQUIREMENTS TO THE ARCHITECT. DO NOT PROCEED WITH THE INSTALLATION OF ANY WORK ENCROACHING ON THE REQUIRED MANEUVERING CLEARANCES UNTIL THE ISSUE HAS BEEN RESOLVED WITH THE ARCHITECT. MAKE NECESSARY CORRECTIONS.

3. DIMENSIONS SHOWN ON ARCHITECTURAL FLOOR PLANS AND ENLARGED PLAN DETAILS ARE TO FACE OF STUD, TO FACE OF MASONRY OR TO CENTER LINE OF COLUMN UNLESS OTHERWISE NOTED.

4. ENSURE FINISH SURFACES ARE FLUSH AND SEAMLESS WHERE PARTITIONS AND/OR FURRING ARE COPLANAR.

5. ALL PIPING, CONDUITS AND RELATED MECHANICAL AND ELECTRICAL ITEMS SHALL BE CONCEALED WITHIN PARTITION WALL ASSEMBLY IN FINISHED AREA, U.N.O.;

6. PROVIDE BACKING/BLOCKING TO SUPPORT ALL WALL MOUNTED ITEMS.

7 ALL MECHANICAL PADS TO BE 4" HIGH MINIMUM. U.N.O SIZE OF PAD TO BE VERIFIED BY CONTRACTOR.

8 PITCH SLABS (AND OTHER FLOORS) TO FLOOR DRAINS, TYP.

FLOOR PLAN LEGEND

- AREA OF EXISTING CONSTRUCTION TO REMAIN
- EXISTING CONSTRUCTION
- NEW CONSTRUCTION
- BUILT-IN MILLWORK.
- ALTERNATE - SEE SPECIFICATION AND NOTES FOR ADDITIONAL INFORMATION.
- EXISTING DOOR TO REMAIN
- NEW DOOR, SEE DOOR SCHEDULE



K2 OVERALL SECOND FLOOR PLAN
1/16" = 1'-0"

0 8 16 32

N KEY PLAN

Code Consultant
P. R. SHERMAN, P.E.
P.O. BOX 216
ELKINS, NH 03233-0216
603-526-6190

Kitchen Consultant
RICCA DESIGN STUDIOS
515 WASHINGTON STREET
NORWELL, MA 02061
303-621-6327

Landscape Architect
STIMSON
288 NORFOLK STREET
CAMBRIDGE, MA 02139
617 876 8960

Civil Engineer
DONALD G. BOHNING & ASSOCIATES
7979 PUB PARKWAY
VALLEY VIEW, OH 44125
216-642-1130

Mechanical, Electrical, & Plumbing Engineer
KARPINSKI ENGINEERING
3135 EUCLID AVENUE
CLEVELAND, OH 44115
216-391-3700

Structural Engineer
GILSANZ MURRAY STEFICEK, LLP
129 WEST 27TH STREET
NEW YORK, NY 10001
212-254-0030

CENTERBROOK
Architects and Planners, LLP
67 Main Street
Post Office Box 955
Centerbrook, Connecticut 06409-0955
Telephone 860.767.0175
Facsimile 860.767.8719

STATE OF OHIO — Kirk Lichtenwalter — No. 12533 — REGISTERED ARCHITECT

THE PARK SYNAGOGUE 27500 SHAKER BOULEVARD PEPPER PIKE, OHIO 44124

ISSUED:

No	Name	Date

PHASE:
SITE DEVELOPMENT PLAN APPROVAL

DRAWING NAME:
OVERALL SECOND FLOOR PLAN

JOB #: 1721

© 2021 CENTERBROOK ARCHITECTS AND PLANNERS

DRAWN BY: KL/MGM	DATE: 06/30/2021
CHECKED BY: MS	SCALE:As indicated

SHEET:
A1.21

C:\Revit Local Files\1721 Park Synagogue\ East Building A20 6/17/2021 5:25:15 PM
Cooley_gonsalez@centerbrook.com.rvt

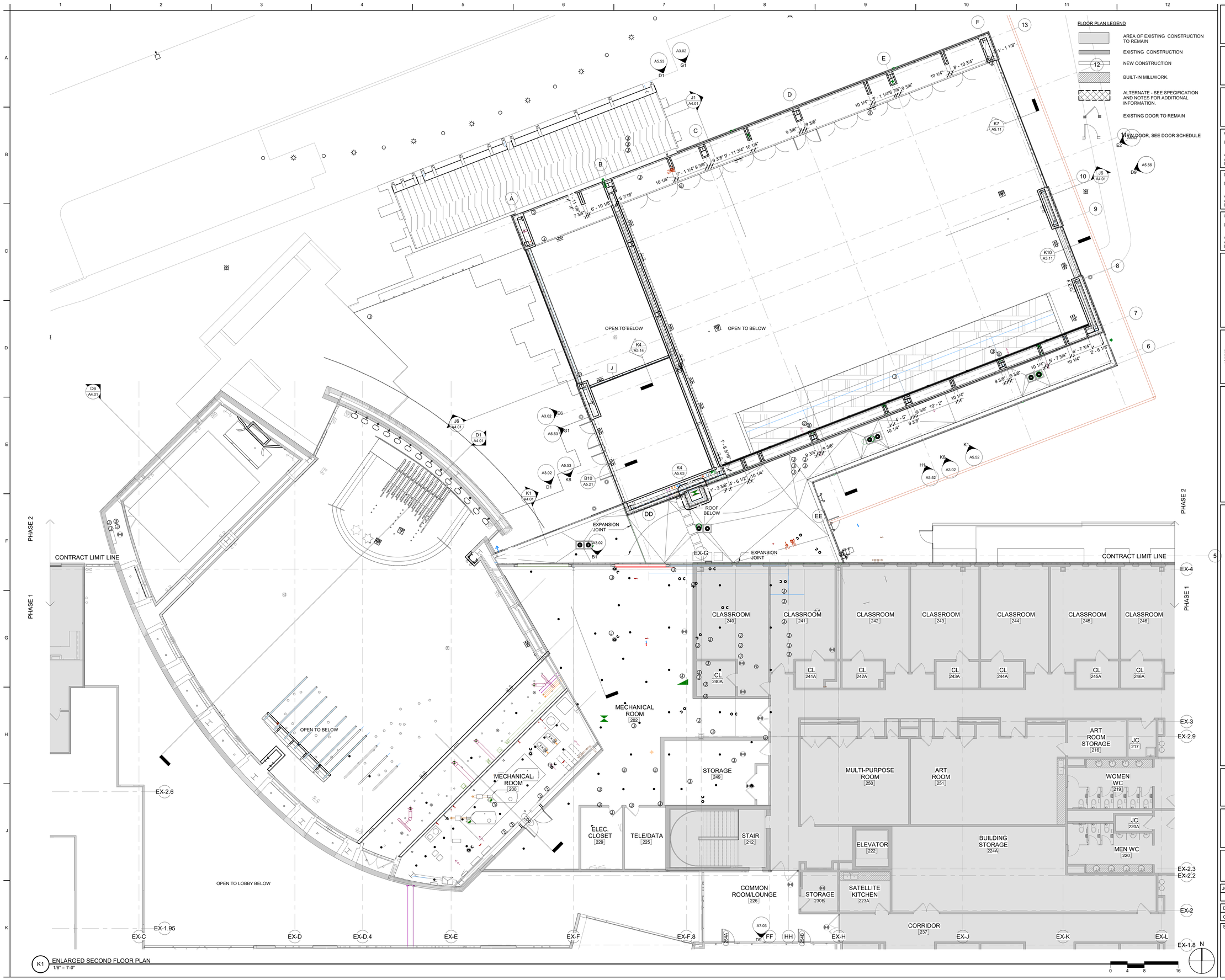

K1 ENLARGED SECOND FLOOR PLAN
1/8" = 1'-0"

Civil Engineer
NAME
Address
Address
Phone FAX

Mechanical, Electrical, & Plumbing Engineer
NAME
Address
Address
Phone FAX

Structural Engineer
NAME
Address
Address
Phone FAX

CENTERBROOK
Architects and Planners, LLP
67 Main Street
Post Office Box 955
Centerbrook, Connecticut 06409-0955
Telephone 860.767.0175
Facsimile 860.767.8719

STATE OF OHIO
Reg. 13253
REGISTERED ARCHITECT

THE PARK SYNAGOGUE 27500 SHAKER BOULEVARD PEPPER PIKE, OHIO 44124

ISSUED:

No	Name	Date

PHASE:
SITE DEVELOPMENT PLAN APPROVAL

DRAWING NAME:
SECOND FLOOR ENLARGED PLAN

JOB #: 1721
© 2021 CENTERBROOK ARCHITECTS AND PLANNERS

DRAWN BY: KL/MGM
DATE: 06/30/2021
CHECKED BY: MS
SCALE: 1/8" = 1'-0"

SHEET:
A1.22

ROOFING NOTES

1. PROTECT ALL ROOFS FROM MATERIAL STORAGE AND CONTRACTOR STAGING AREAS. TYPICAL ALL ROOFS.

2. TYPICAL SLOPE FOR TAPERED INSULATION TO BE 1/4" PER FOOT WITH 1/2" PER FOOT CRICKET SLOPE.

3. CONTRACTOR TO FIELD VERIFY LOCATION OF ROOF CONDUITS AND CABLES, PLUMBING VENTS, AND MECHANICAL CURBS. FLASH IN ACCORDANCE WITH MANUFACTURER SPECIFICATIONS.

4. ROOFING DETAILS SHOWN ARE FOR REFERENCE ONLY, TO PROVIDE SYSTEMS DESCRIPTIONS. PROVIDE SHOP DRAWINGS OF APPLICABLE APPROVED DETAILS TO COMPLY WITH NRCA ROOFING & WATERPROOFING STANDARDS, PER MANUFACTURERS RECOMMENDATIONS, AT ALL MEMBRANE AREAS, PENETRATIONS, FLASHING DETAILS, CURBS, AND INTERSECTIONS FOR ARCHITECT'S REVIEW.

5. PROVIDE SOLID P.T. BLOCKING BEHIND ALL METAL FASCIA COMPONENTS AND AS INDICATED IN THE DRAWINGS. NOTE THAT SOME BLOCKING HAS BEEN OMITTED FROM THE DRAWINGS FOR CLARITY.

6. ROOF SYSTEMS INDICATED MUST BE INSTALLED AS COMPLETE SYSTEMS. COMPLY WITH MANUFACTURER'S RECOMMENDATIONS, INDUSTRY STANDARDS, AND NRCA STANDARDS. THE ROOF DRAWINGS AND DETAILS ARE DIAGRAMMATIC IN NATURE AND ARE NOT INTENDED TO SHOW ALL APPLICABLE DETAILS FOR REVIEW FOR ALL SYSTEM COMPONENTS. G.C. SHALL PROVIDE AND COORDINATE ROOFING WORK TO PRODUCE COMPLETE, THOROUGH, FINISHED ROOF SYSTEMS WHICH SHALL COMPLY WITH MANUFACTURER'S WARRANTEES.

7. VERIFY LOCATIONS AND SIZES OF EXISTING ROOF DRAINS AND PLUMBING VENTS IN THE FIELD. COORDINATE WORK WITH HAZARDOUS MATERIALS DRAWINGS AND MEP DRAWINGS FOR NEW WORK.

8. SEE ROOF DETAILS FOR WALL AND ROOFING SYSTEM CONSTRUCTION.

9. PROVIDE CRICKET OF TYPICAL ROOFING CONSTRUCTION AND MATERIALS AS REQUIRED TO MAINTAIN PITCH TO RD AT ALL NEW AND EXISTING ROOF TOP EQUIPMENT CURB LOCATIONS

10. ROOF PITCHES SHOWN ARE FOR REFERENCE ONLY. VERIFY FIELD CONDITIONS.

11. DETAIL SHOWN ARE DIAGRAMMATIC AND DO NOT SHOW ALL COMPONENTS OF THE ASSEMBLY COORDINATE ALL BLOCKING & MISC. STL FRAMING TO ACHIEVE DESIGN INTENT.

12. SEE BUILDING SECTIONS FOR WALL AND ROOFING SYSTEM CONSTRUCTIONS.

13. ALIGNMENTS SHOWN RELATING EXISTING AND NEW WORK ARE CRITICAL AND MUST BE MAINTAINED- VERIFY DIMENSIONS IN FIELD. VERIFY EXISTING ROOF PITCHES, ROOF COMPOSITION, FASCIA DIMENSIONS AND ELEVATIONS AND NOTIFY ARCHITECT OF ANY DISCREPANCIES OR CONFLICTS PRIOR TO PROCEEDING WITH THE WORK.

ROOFING LEGEND

- OV RD / RD — OVERFLOW, ROOF DRAIN
- VS — VENT STACK, VENT TO ROOF- SEE PLUMBING DRAWINGS
- RTU — ROOF TOP UNIT-SEE MECHANICAL DRAWINGS
- WALKWAY PAD, TYP.
- AREA OF EXISTING CONSTRUCTION TO REMAIN

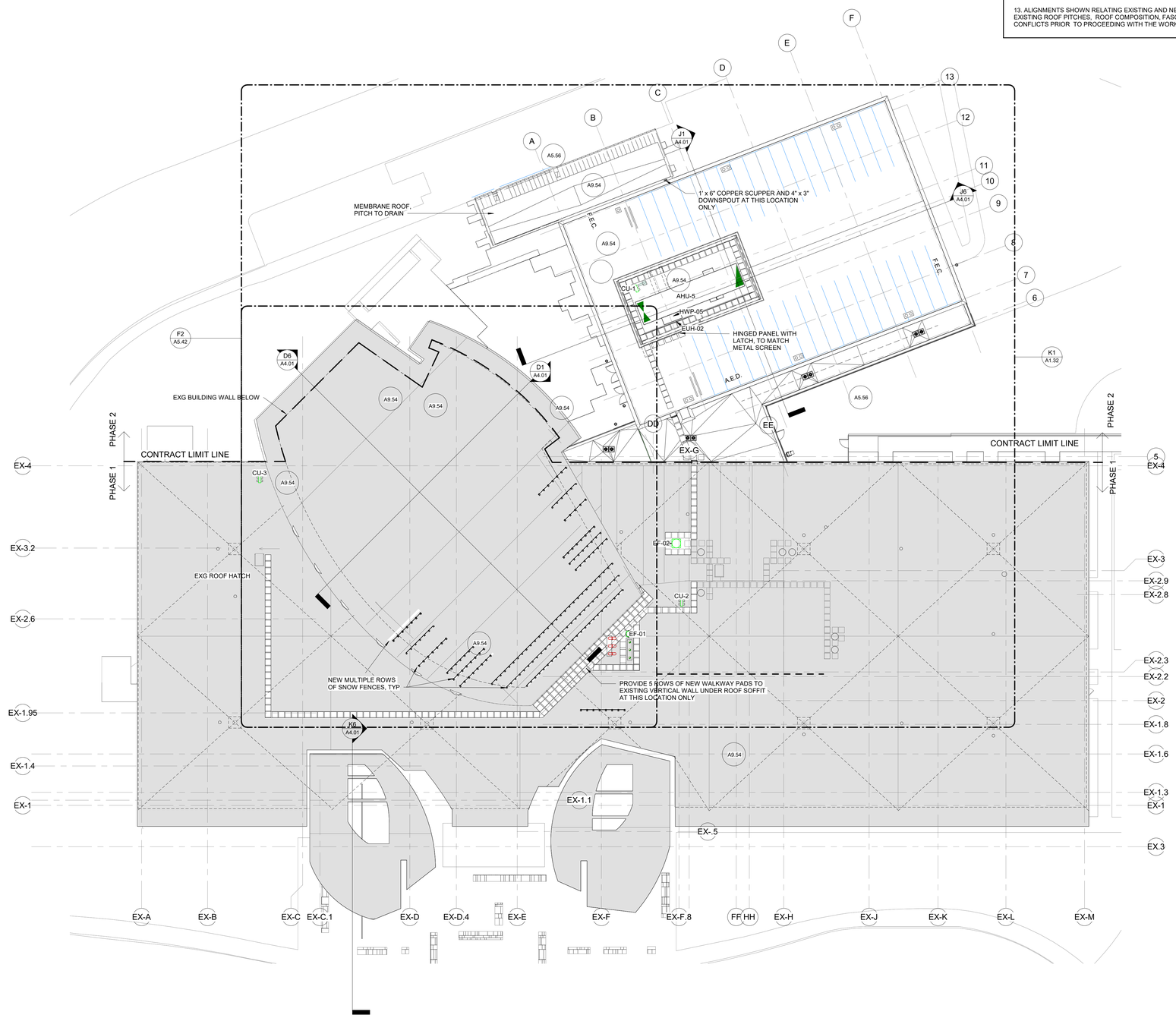

K2 OVERALL ROOF PLAN
1/16" = 1'-0"

0 8 16 32

N

N KEY PLAN

Code Consultant
P. R. SHERMAN, P.E.
P.O. BOX 216
ELKINS, NH 03233-0216
603-526-6190

Kitchen Consultant
RICCA DESIGN STUDIOS
515 WASHINGTON STREET
NORWELL, MA 02061
303-621-6327

Landscape Architect
STIMSON
288 NORFOLK STREET
CAMBRIDGE, MA 02139
617 876 8960

Civil Engineer
DONALD G. BOHNING & ASSOCIATES
7979 PUB PARKWAY
VALLEY VIEW, OH 44125
216-642-1130

Mechanical, Electrical, & Plumbing Engineer
KARPINSKI ENGINEERING
3135 EUCLID AVENUE
CLEVELAND, OH 44115
216-391-3700

Structural Engineer
GILSANZ MURRAY STEFICEK, LLP
129 WEST 27TH STREET
NEW YORK, NY 10001
212-254-0030

CENTERBROOK
Architects and Planners, LLP
67 Main Street
Post Office Box 955
Centerbrook, Connecticut 06409-0955
Telephone 860.767.0175
Facsimile 860.767.8719

STATE OF OHIO — Ida 12533 — REGISTERED ARCHITECT

THE PARK SYNAGOGUE 27500 SHAKER BOULEVARD PEPPER PIKE, OHIO 44124

ISSUED:

No	Name	Date

PHASE:
SITE DEVELOPMENT PLAN APPROVAL

DRAWING NAME:
OVERALL ROOF PLAN

JOB #: 1721

© 2021 CENTERBROOK ARCHITECTS AND PLANNERS

DRAWN BY: KL/MGM | DATE: 06/30/2021
CHECKED BY: MS | SCALE:As indicated

SHEET:
A1.31

C:\Revit Local Files\1721 Park Synagogue East Building A20 6/17/2021 5:36:44 PM
Central_garrett@centerbrook.com.rvt

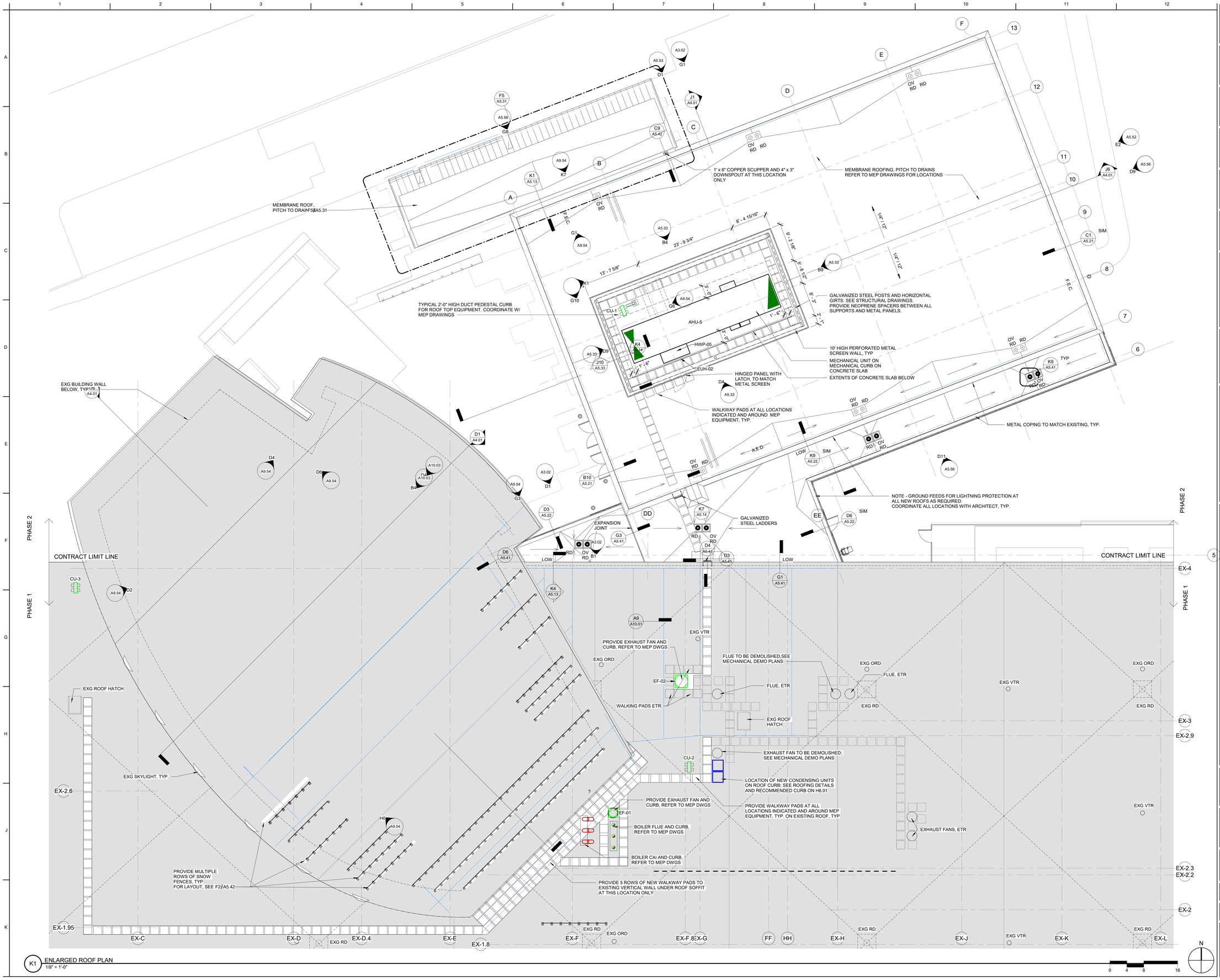

K1 ENLARGED ROOF PLAN
1/8" = 1'-0"

Civil Engineer
NAME
Address
Address
Phone FAX

Mechanical, Electrical, & Plumbing Engineer
NAME
Address
Address
Phone FAX

Structural Engineer
NAME
Address
Address
Phone FAX

CENTERBROOK
Architects and Planners, LLP
67 Main Street
Post Office Box 955
Centerbrook, Connecticut 06409-0955
Telephone 860.767.0175
Facsimile 860.767.8719

STATE OF OHIO
No. 13253
REGISTERED ARCHITECT

THE PARK SYNAGOGUE 27500 SHAKER BOULEVARD PEPPER PIKE, OHIO 44124

ISSUED:

No	Name	Date

PHASE:
SITE DEVELOPMENT PLAN APPROVAL

DRAWING NAME:
ROOF ENLARGED PLAN

JOB #: 1721

© 2021 CENTERBROOK ARCHITECTS AND PLANNERS

DRAWN BY: KL/MGM DATE: 06/30/2021
CHECKED BY: MS SCALE: 1/8" = 1'-0"

SHEET:
A1.32

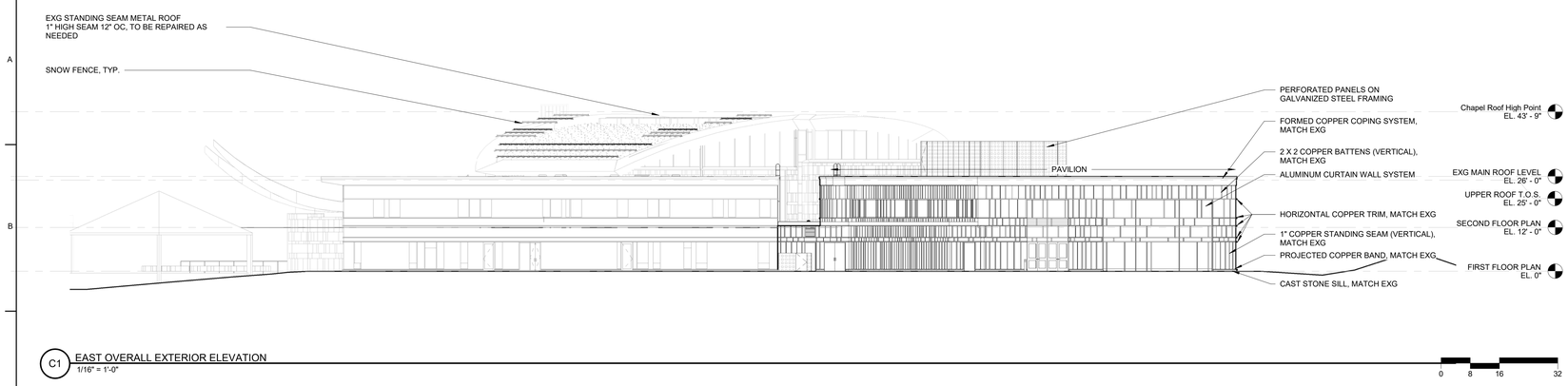

C1 EAST OVERALL EXTERIOR ELEVATION
1/16" = 1'-0"

0 8 16 32

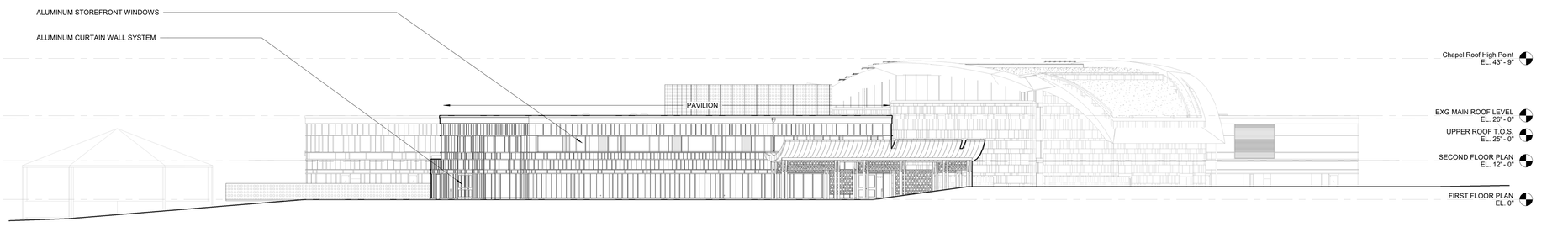

E1 NORTH OVERALL EXTERIOR ELEVATION
1/16" = 1'-0"

0 8 16 32



H1 SOUTH OVERALL EXTERIOR ELEVATION
1/16" = 1'-0"

0 4 8 16

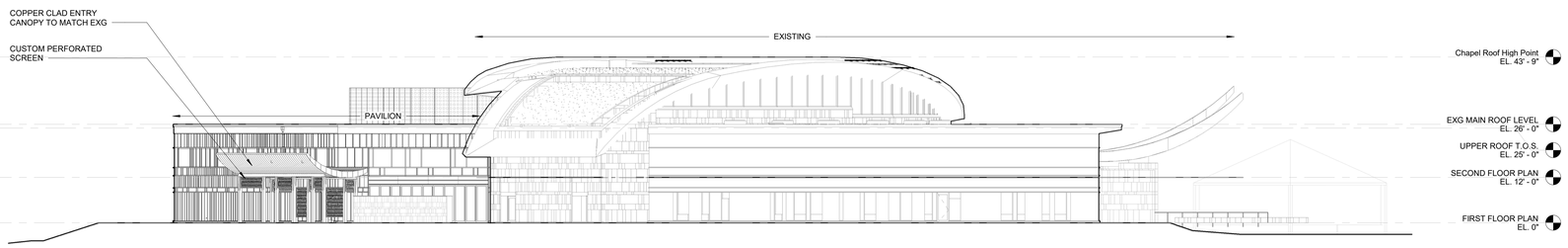

K1 WEST OVERALL EXTERIOR ELEVATION
1/16" = 1'-0"

0 4 8 16

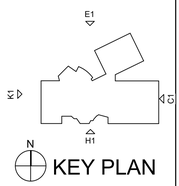

KEY PLAN

Code Consultant
P. R. SHERMAN, P.E.
P.O. BOX 216
ELKINS, NH 03233-0216
603-526-6190

Kitchen Consultant
RICCA DESIGN STUDIOS
515 WASHINGTON STREET
NORWELL, MA 02061
303-621-6327

Landscape Architect
STIMSON
288 NORFOLK STREET
CAMBRIDGE, MA 02139
617 876 8960

Civil Engineer
DONALD G. BOHNING & ASSOCIATES
7979 PUB PARKWAY
VALLEY VIEW, OH 44125
216-642-1130

Mechanical, Electrical, & Plumbing Engineer
KARPINSKI ENGINEERING
3135 EUCLID AVENUE
CLEVELAND, OH 44115
216-391-3700

Structural Engineer
GILSANZ MURRAY STEFICEK, LLP
129 WEST 27TH STREET
NEW YORK, NY 10001
212-254-0030

CENTERBROOK
Architects and Planners, LLP
67 Main Street
Post Office Box 955
Centerbrook, Connecticut 06409-0955
Telephone 860.767.0175
Facsimile 860.767.8719

STATE OF OHIO
No. 12533
REGISTERED ARCHITECT

THE PARK SYNAGOGUE 27500 SHAKER BOULEVARD PEPPER PIKE, OHIO 44124

ISSUED:

No	Name	Date

PHASE:
SITE DEVELOPMENT PLAN APPROVAL

DRAWING NAME:
OVERALL EXTERIOR ELEVATIONS

JOB #: 1721

© 2021 CENTERBROOK ARCHITECTS AND PLANNERS

DRAWN BY: KL/MGM
DATE: 06/30/2021
CHECKED BY: MS
SCALE: 1/16" = 1'-0"

SHEET:
A3.01

C:\Revit Local Files\1721 Park Synagogue East Building A20 6/17/2021 5:30:21 PM
Central_jgarner@centerbrook.com.rvt

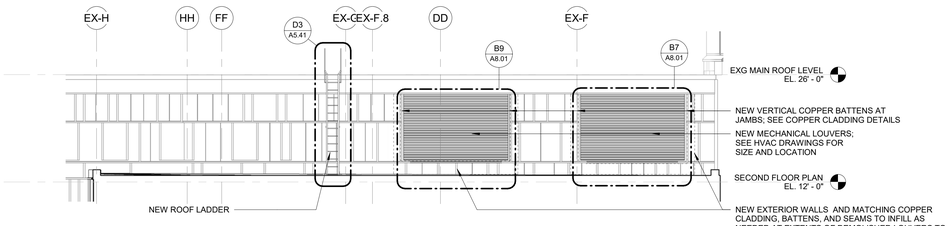

B1 SOUTH EXTERIOR ELEVATION PAVILION AT LOUVERS
1/8" = 1'-0"
0 4 8 16

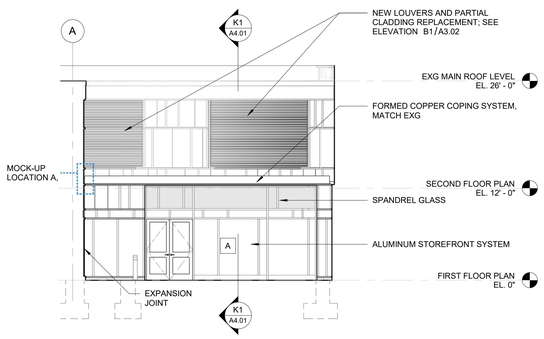

D1 NORTH COURTYARD EXTERIOR ELEVATION
1/8" = 1'-0"
0 4 8 16

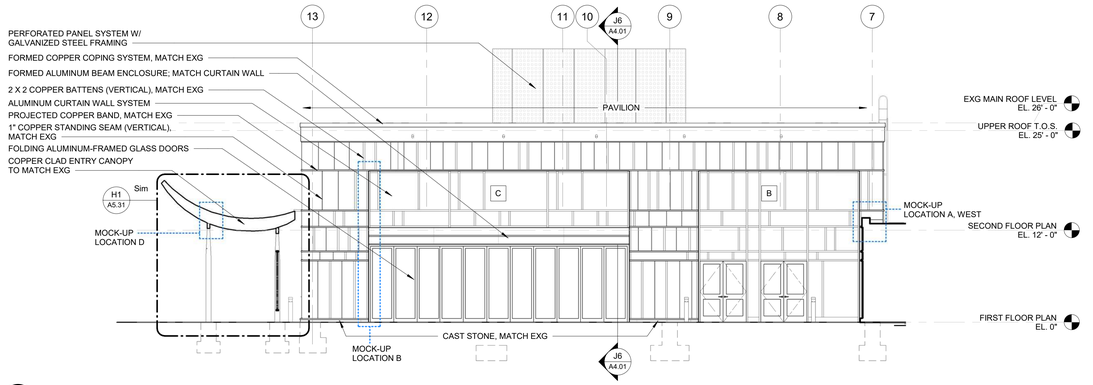

E6 WEST EXTERIOR ELEVATION PAVILION
1/8" = 1'-0"
0 4 8 16

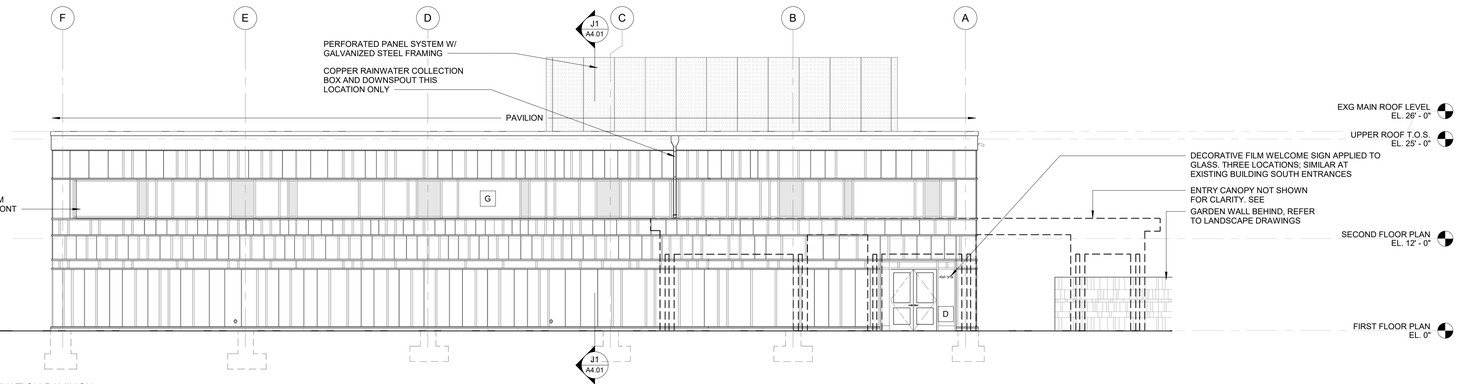

G1 NORTH EXTERIOR ELEVATION PAVILION
1/8" = 1'-0"
0 4 8 16

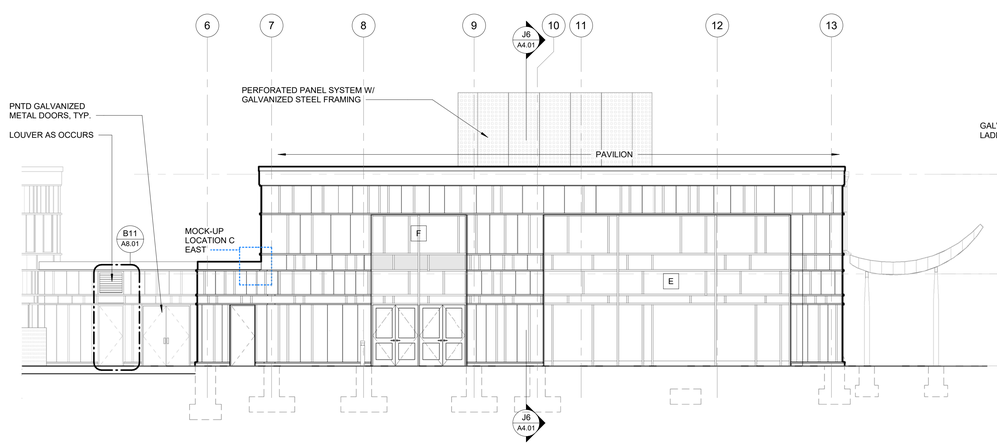

K1 EAST EXTERIOR ELEVATION PAVILION
1/8" = 1'-0"
0 4 8 16

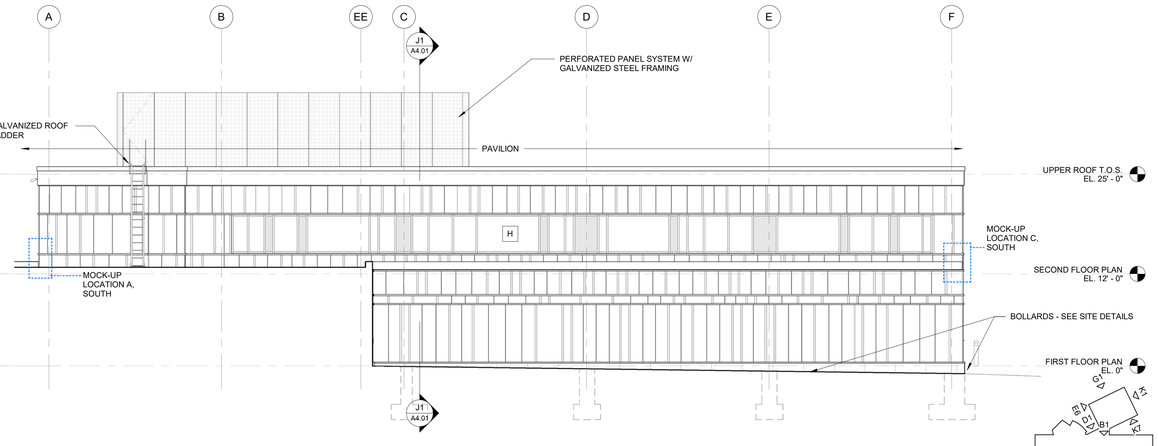

K6 SOUTH EXTERIOR ELEVATION PAVILION
1/8" = 1'-0"
0 4 8 16

N
KEY PLAN

Code Consultant
P. R. SHERMAN, P.E.
P.O. BOX 216
ELKINS, NH 03233-0216
603-526-6190

Kitchen Consultant
RICCA DESIGN STUDIOS
515 WASHINGTON STREET
NORWELL, MA 02061
303-621-6327

Landscape Architect
STIMSON
288 NORFOLK STREET
CAMBRIDGE, MA 02139
617 876 8960

Civil Engineer
DONALD G. BOHNING & ASSOCIATES
7979 PUB PARKWAY
VALLEY VIEW, OH 44125
216-642-1130

Mechanical, Electrical, & Plumbing Engineer
KARPINSKI ENGINEERING
3135 EUCLID AVENUE
CLEVELAND, OH 44115
216-391-3700

Structural Engineer
GILSANZ MURRAY STEFICEK, LLP
129 WEST 27TH STREET
NEW YORK, NY 10001
212-254-0030

CENTERBROOK
Architects and Planners, LLP
67 Main Street
Post Office Box 955
Centerbrook, Connecticut 06409-0955
Telephone 860.767.0175
Facsimile 860.767.8719

STATE OF OHIO
Kirk Lyon
No. 12533
REGISTERED ARCHITECT

THE PARK SYNAGOGUE 27500 SHAKER BOULEVARD PEPPER PIKE, OHIO 44124

ISSUED:

No	Name	Date

PHASE:
SITE DEVELOPMENT PLAN APPROVAL

DRAWING NAME:
EXTERIOR ELEVATIONS - PAVILION

JOB #: 1721

© 2021 CENTERBROOK ARCHITECTS AND PLANNERS

DRAWN BY: KL/MGM
DATE: 06/30/2021
CHECKED BY: MS
SCALE: 1/8" = 1'-0"

SHEET:
A3.02

C:\Revit Local Files\1721 Park Synagogue East Building A20 6/17/2021 5:30:34 PM
Central_gjansen@centerbrook.com.rvt

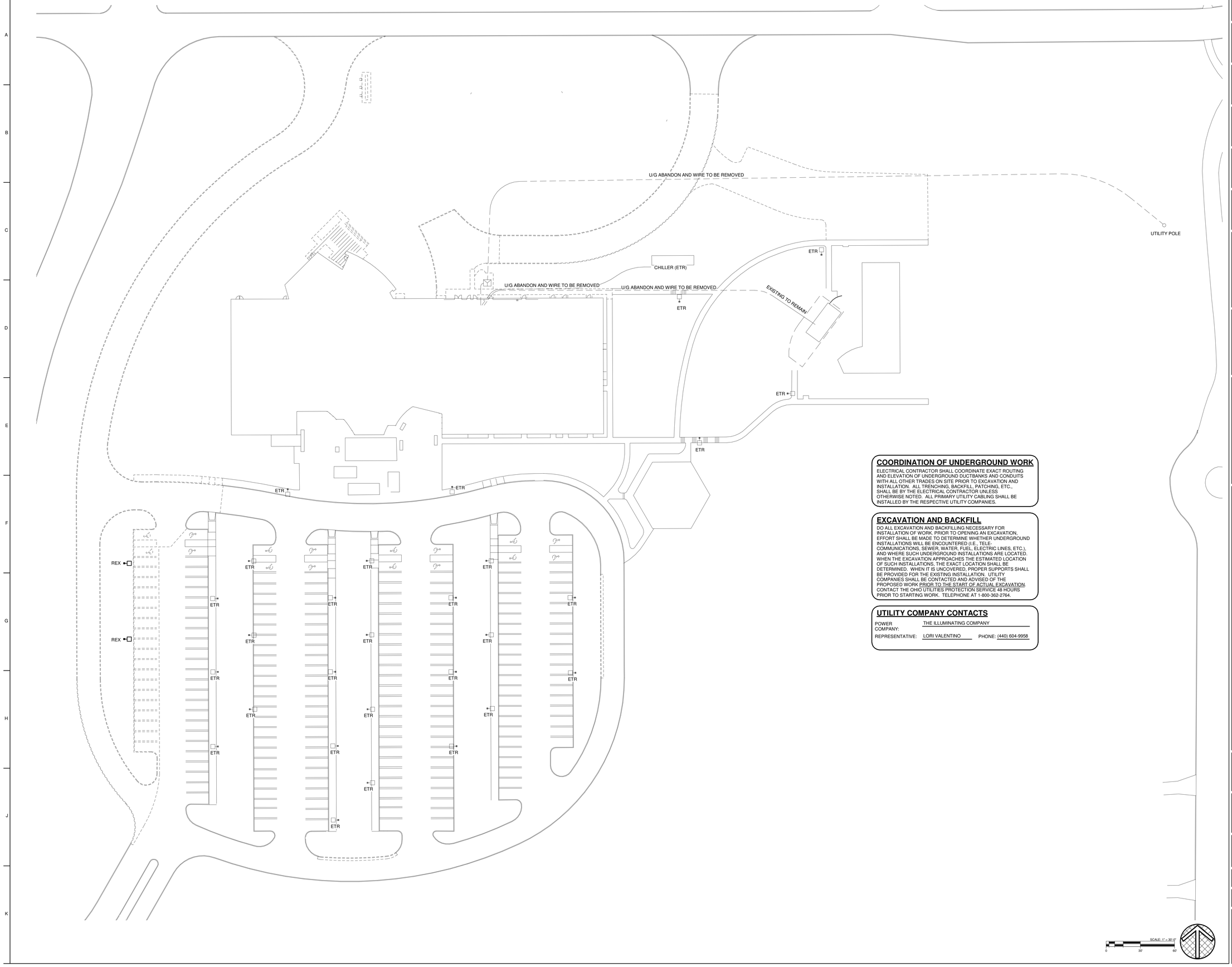
U/G ABANDON AND WIRE TO BE REMOVED
UTILITY POLE
CHILLER (ETR)
ETR
U/G ABANDON AND WIRE TO BE REMOVED
U/G ABANDON AND WIRE TO BE REMOVED
EXISTING TO REMAIN
ETR
ETR
ETR
ETR
ETR
REX
REX
ETR
ETR
ETR
ETR
ETR

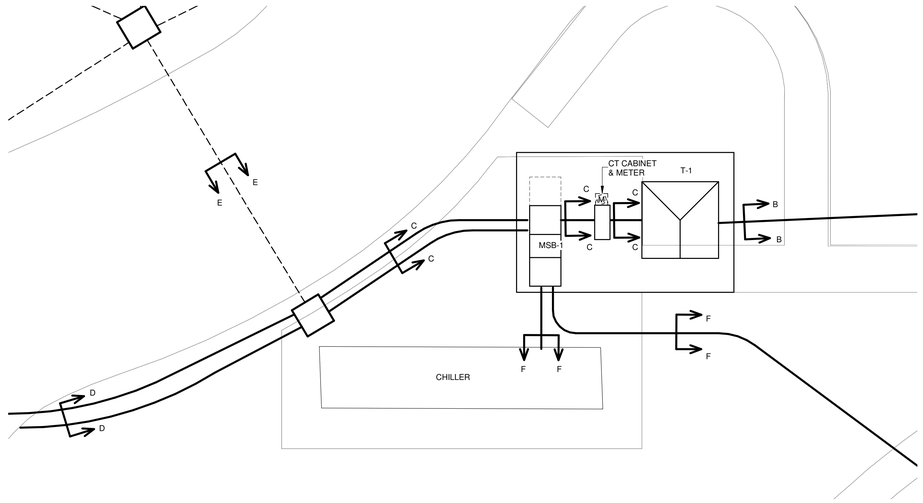

ENLARGED ELECTRICAL DUCT PLAN (8)

1/8" = 1'-0" ES1.00

0 2' 4' 6' 8' 12' 16'

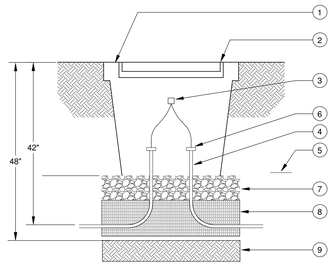

NOTES:

1. FLUSH TO GRADE IN GROUND PULLBOX OPEN BOTTOM. QUAZITE SERIES PG OR EQUAL. REFER TO SITE PLAN DRAWINGS FOR ADDITIONAL INFORMATION.
2. HEAVY DUTY BOLTED COVER WITH LOGO "LIGHTING", "ELECTRIC" OR "COMMUNICATION" AS APPLICABLE.
3. SPLICING CONNECTOR (BLACKBURN WRG, BRUNDY YPC2A8U OR EQUAL) ENCAPSULATED WITH A RAYCHEM GEL ENCLOSURE PART # GHFC-1-90.
4. CONDUITS TO EXTEND 3" ABOVE GRAVEL TYPICAL.
5. RED 3" WIDE WARNING TAPE WITH ALUMINUM CORE ABOVE ALL UNDERGROUND CONDUITS.
6. SEAL CONDUITS WITH POLYWATER FST-250 OR EQUAL.
7. 6" OF GRAVEL OR CRUSHED ROCK FOR DRAINAGE PURPOSES. EXTEND GRAVEL 4" BEYOND EDGE OF BOX.
8. CLEAN FILL.
9. UNDISTURBED EARTH MATERIAL.

TYPICAL HANDHOLE DETAIL

SCALE: NONE

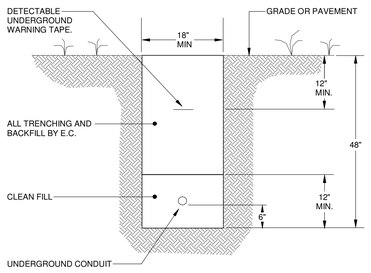

NOTES:

1. CONTRACTOR SHALL LOCATE UNDERGROUND CONDUIT AT A MINIMUM OF 10'-0" FROM NEAREST TREE, OR IF NOT PRACTICAL, AS DIRECTED IN FIELD BY THE LANDSCAPE ARCHITECT.
2. ALL UNDERGROUND ELECTRICAL CONDUIT SHALL HAVE A DETECTABLE WARNING TAPE INSTALLED 12" BELOW GRADE - DIRECTLY ABOVE THE CONDUIT. WARNING TAPE SHALL BE "TERRA TAPE", 3" WIDE, LABELED WITH "CAUTION A, B, C, OR D BURIED BELOW". CONTACT: REEF INDUSTRIES, INC. 1-800-231-6074
   A. "ELECTRIC LINE", #42-0064
   B. "TELEPHONE LINE", #42-0041
   C. "HIGH VOLTAGE LINE", #42-0111
   D. "FIBER OPTIC CABLE", #42-0037
3. CONCRETE ENCASE CONDUIT(S) UNDER ROADWAYS, DRIVEWAYS AND PARKING LOTS. MINIMUM OF 3" CONCRETE ENCASEMENT. (NOT APPLICABLE FOR BRANCH CIRCUITS.)

UNDERGROUND CONDUIT INSTALLATION DETAIL

SCALE: NONE

GENERAL SITE LIGHTING NOTE

A. SITE LIGHTING POLES - POLES 20 FEET AND HIGHER SHALL BE PROVIDED WITH FACTORY INSTALLED VIBRATION DAMPENERS. POLE MANUFACTURER SHALL PROVIDE POLES DESIGNED FOR A STEADY WIND VELOCITY OF 80 MPH WITH A 1.3 GUST FACTOR FOR THE NORTHEAST OHIO AREA, OR AS APPROPRIATE FOR THE AREA THIS PROJECT IS LOCATED IN. THE ELECTRICAL CONTRACTOR SHALL PROVIDE ADEQUATE SLACK IN THE WIRING AT THE BASE OF THE POLE TO COMPENSATE FOR WIND MOVEMENT. ALL POLES SHALL BE GROUNDED IN ACCORDANCE WITH THE NEC AND ANY OTHER LOCAL CODES, OR AS INDICATED ON THE POLE BASE DETAILS, WHICHEVER ARE MORE STRINGENT. THE BASE DETAILS INDICATED ON THE DRAWINGS SHALL BE USED AS GUIDES ONLY AS THE MANUFACTURER'S INSTALLATION INSTRUCTIONS AND TEMPLATE DRAWINGS MUST BE UTILIZED DURING INSTALLATION. ONLY THE BOLT AND NUT KITS SUPPLIED BY THE POLE MANUFACTURER SHALL BE USED. THE ELECTRICAL CONTRACTOR SHALL CONSULT WITH THE CIVIL CONTRACTOR AND SHOULD SOIL CONDITIONS BE QUESTIONABLE, THE BASE DIMENSIONS AND DEPTHS SHALL BE ADJUSTED AS RECOMMENDED BY THE STRUCTURAL ENGINEER.

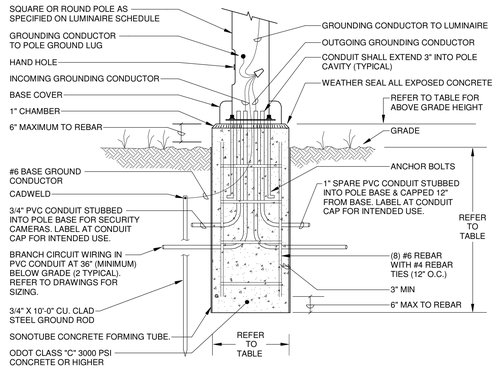

LUMINAIRE BASE DIMENSIONS

LUMINAIRE TYPE	POLE HEIGHT	LOCATION	BASE DEPTH	BASE DIA	ABOVE GRADE HEIGHT
AX18 AX19	12'-0"	NON-PARKING PARKING	48"	24"	2"
AX20 AX21	20'-0"	NON-PARKING PARKING	48"	24"	2"

NOTES:

1. DETAIL ASSUMES 2000 PSF AVERAGE LATERAL SOIL BEARING CAPACITY IN UNDISTURBED (OR WELL COMPACTED) EARTH.
2. DESIGN ASSUMES SINGLE OR DOUBLE LUMINAIRE NOT EXCEEDING POLE MANUFACTURE'S SPECIFICATIONS FOR WEIGHT, MAXIMUM EPA (EFFECTIVE PROJECTED AREA), AND 100 MPH DESIGN WIND SPEED.
3. CONSULT STRUCTURAL ENGINEER IF ACTUAL SITE CONDITIONS (OR LUMINAIRE CONFIGURATION) VARIES FROM DESIGN ASSUMPTIONS.
4. USE GRADE 60 REINFORCING STEEL. USE EPOXY COATED STEEL IN PARKING LOT APPLICATIONS OR IN AREAS WHERE DE-ICING SALT IS USED. MAINTAIN 3" (MINIMUM).
5. INSTALL POLE IN STRICT ACCORDANCE WITH POLE MANUFACTURER'S RECOMMENDATIONS. VIBRATION DAMPENERS SHALL BE PROVIDED.
6. ANCHOR BOLTS SHALL NOT BE CUT OFF FOR ANY REASON. EXTENSION COUPLERS ARE NOT PERMITTED.
7. INSTALL FOUNDATION A MINIMUM OF 2'-6" FROM BACK OF CURB IN PARKING LOTS. INSTALL FOUNDATION A MINIMUM OF 36" FROM STORM OR SANITARY PIPING.
8. AT LOCATIONS WHERE THE EXISTING SLOPE IS 6:1 OR GREATER, THE BURIED DEPTH OF FOUNDATION SHALL APPLY TO THE LOW SIDE OF SLOPE.

POLE MOUNTED LUMINAIRE BASE DETAIL

SCALE: NONE

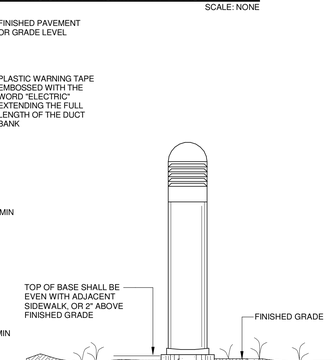

DUCT SECTION "A-A"

SCALE: NONE

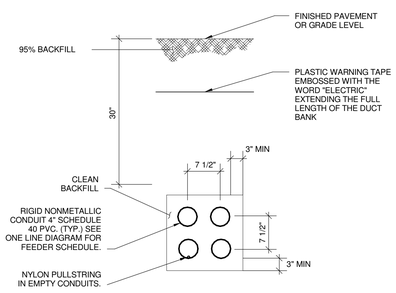

DUCT SECTION "B-B"

SCALE: NONE

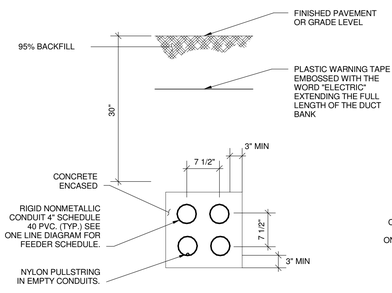

DUCT SECTION "C-C"

SCALE: NONE

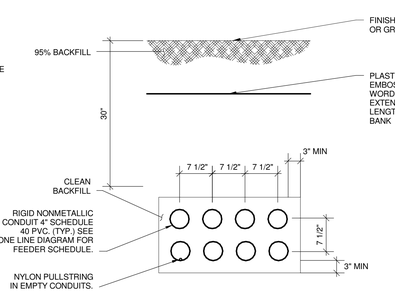

DUCT SECTION "D-D"

SCALE: NONE

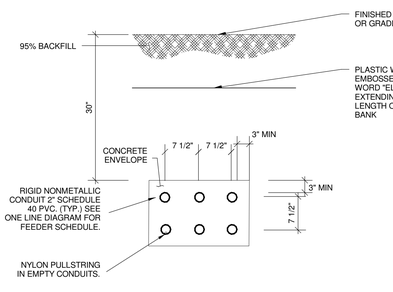

DUCT SECTION "E-E"

SCALE: NONE

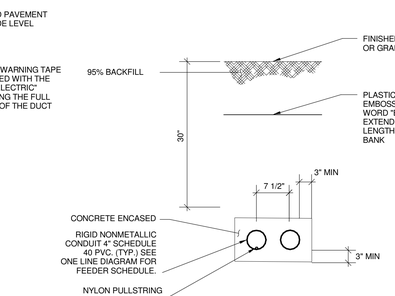

DUCT SECTION "F-F"

SCALE: NONE

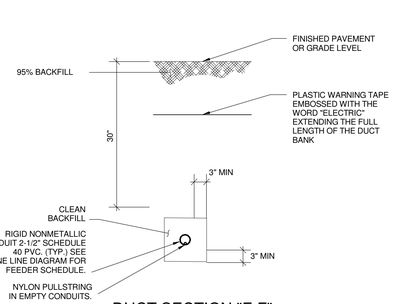

DUCT SECTION "F-F"

SCALE: NONE

BOLLARD LUMINAIRE BASE DETAIL

SCALE: NONE

NOTES:

1. REFER TO MANUFACTURERS INSTALLATION INSTRUCTIONS FOR EXACT REQUIREMENTS

Code Consultant
P. R. SHERMAN, P.E.
P.O. BOX 216
ELKINS, NH 03233-0216
603-526-6190

Kitchen Consultant
RICCA DESIGN STUDIOS
515 WASHINGTON STREET
NORWELL, MA 02061
303-621-6327

Landscape Architect
STIMSON
288 NORFOLK STREET
CAMBRIDGE, MA 02139
617 876 8960

Civil Engineer
DONALD G. BOHNING & ASSOCIATES
7979 PUB PARKWAY
VALLEY VIEW, OH 44125
216-642-1130

Mechanical, Electrical, & Plumbing Engineer
KARPINSKI ENGINEERING
3135 EUCLID AVENUE
CLEVELAND, OH 44115
216-391-3700

Structural Engineer
GILSANZ MURRAY STEFICEK, LLP
129 WEST 27TH STREET
NEW YORK, NY 10001
212-254-0030

CENTERBROOK
Architects and Planners, LLP
67 Main Street
Post Office Box 955
Centerbrook, Connecticut 06409-0955
Telephone 860.767.0175
Facsimile 860.767.8719

STATE OF OHIO — BRIAN J. DAVID — E-61663 — REGISTERED PROFESSIONAL ENGINEER ©

THE PARK SYNAGOGUE 27500 SHAKER BOULEVARD PEPPER PIKE, OHIO 44124

ISSUED:

No	Name	Date

PHASE:
SITE DEVELOPMENT PLAN APPROVAL

DRAWING NAME:
SITE LEGEND AND DETAILS

JOB #: 1721

© 2021 CENTERBROOK ARCHITECTS AND PLANNERS

DRAWN BY: SGB | DATE: 06/30/2021
CHECKED BY: DDW | SCALE: NONE

SHEET:
ES0.01

I:\Autoc local\Revit\Users\SBlank\Documents\20005_MEP_CENTRAL_SBlank24827.rvt

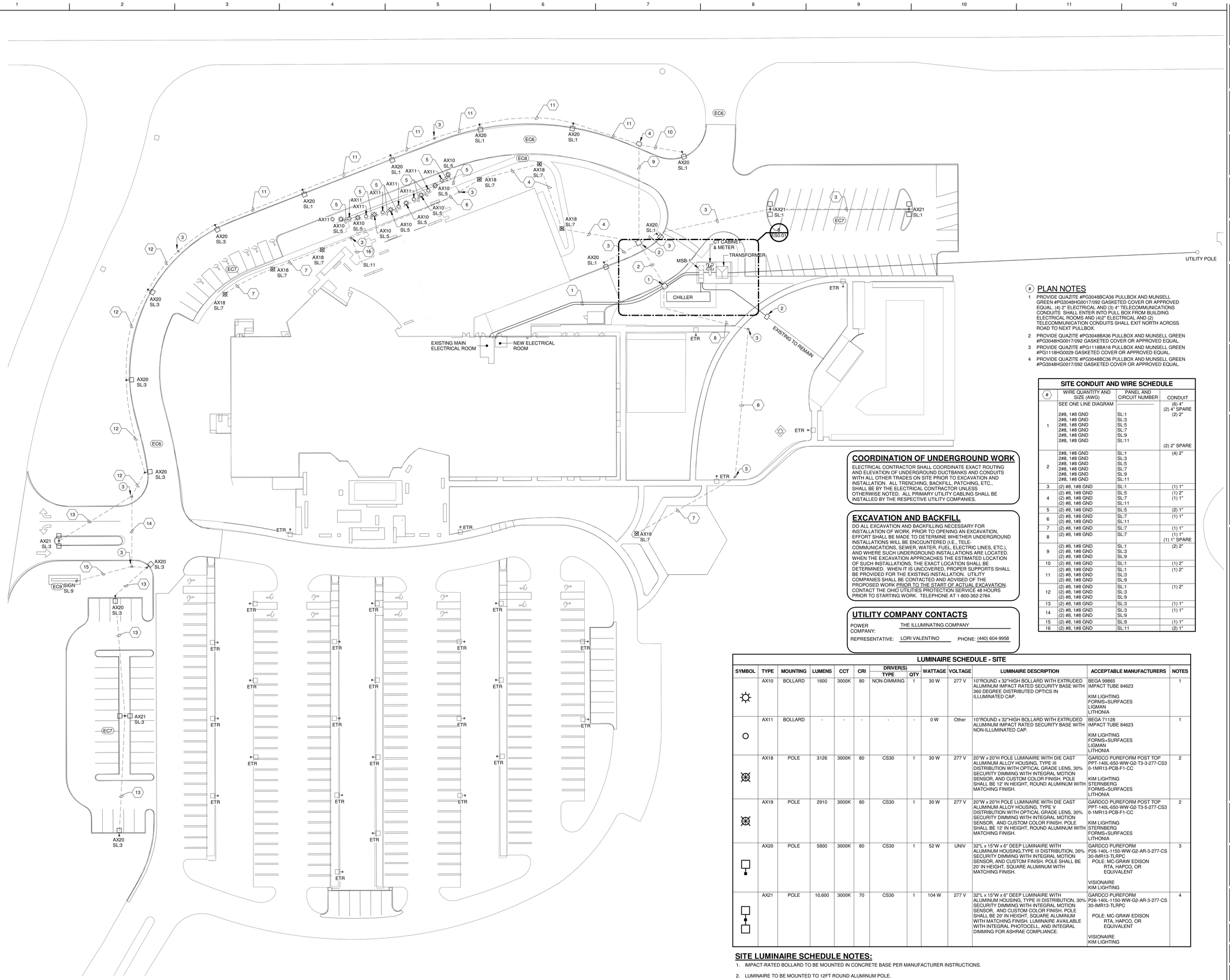

PLAN NOTES

1. PROVIDE QUAZITE #PG3048BCA36 PULLBOX AND MUNSELL GREEN #PG3048HG0017/092 GASKETED COVER OR APPROVED EQUAL. (4) 2" ELECTRICAL AND (3) 4" TELECOMMUNICATIONS CONDUITS SHALL ENTER INTO PULL BOX FROM BUILDING ELECTRICAL ROOMS AND (4)2" ELECTRICAL AND (2) TELECOMMUNICATION CONDUITS SHALL EXIT NORTH ACROSS ROAD TO NEXT PULLBOX.
2. PROVIDE QUAZITE #PG3048BA36 PULLBOX AND MUNSELL GREEN #PG3048HG0017/092 GASKETED COVER OR APPROVED EQUAL.
3. PROVIDE QUAZITE #PG1118BA18 PULLBOX AND MUNSELL GREEN #PG1118HG0029 GASKETED COVER OR APPROVED EQUAL.
4. PROVIDE QUAZITE #PG3048BC36 PULLBOX AND MUNSELL GREEN #PG3048HG0017/092 GASKETED COVER OR APPROVED EQUAL.

SITE CONDUIT AND WIRE SCHEDULE

#	WIRE QUANTITY AND SIZE (AWG)	PANEL AND CIRCUIT NUMBER	CONDUIT
1	SEE ONE LINE DIAGRAM 2#8, 1#8 GND 2#8, 1#8 GND 2#8, 1#8 GND 2#8, 1#8 GND 2#8, 1#8 GND 2#8, 1#8 GND	---------- SL:1 SL:3 SL:5 SL:7 SL:9 SL:11	(6) 4" (2) 4" SPARE (2) 2" (2) 2" SPARE
2	2#8, 1#8 GND 2#8, 1#8 GND 2#8, 1#8 GND 2#8, 1#8 GND 2#8, 1#8 GND 2#8, 1#8 GND	SL:1 SL:3 SL:5 SL:7 SL:9 SL:11	(4) 2"
3	(2) #8, 1#8 GND	SL:1	(1) 1"
4	(2) #8, 1#8 GND (2) #8, 1#8 GND (2) #8, 1#8 GND	SL:5 SL:7 SL:11	(1) 2" (1) 1"
5	(2) #8, 1#8 GND	SL:5	(2) 1"
6	(2) #8, 1#8 GND (2) #8, 1#8 GND	SL:7 SL:11	(1) 1"
7	(2) #8, 1#8 GND	SL:7	(1) 1"
8	(2) #8, 1#8 GND	SL:7	(1) 1" (1) 1" SPARE
9	(2) #8, 1#8 GND (2) #8, 1#8 GND (2) #8, 1#8 GND	SL:1 SL:3 SL:9	(2) 2"
10	(2) #8, 1#8 GND	SL:1	(1) 2"
11	(2) #8, 1#8 GND (2) #8, 1#8 GND (2) #8, 1#8 GND	SL:1 SL:3 SL:9	(1) 2"
12	(2) #8, 1#8 GND (2) #8, 1#8 GND (2) #8, 1#8 GND	SL:1 SL:3 SL:9	(1) 2"
13	(2) #8, 1#8 GND	SL:3	(1) 1"
14	(2) #8, 1#8 GND (2) #8, 1#8 GND	SL:3 SL:9	(1) 1"
15	(2) #8, 1#8 GND	SL:9	(1) 1"
16	(2) #8, 1#8 GND	SL:11	(2) 1"

COORDINATION OF UNDERGROUND WORK

ELECTRICAL CONTRACTOR SHALL COORDINATE EXACT ROUTING AND ELEVATION OF UNDERGROUND DUCTBANKS AND CONDUITS WITH ALL OTHER TRADES ON SITE PRIOR TO EXCAVATION AND INSTALLATION. ALL TRENCHING, BACKFILL, PATCHING, ETC., SHALL BE BY THE ELECTRICAL CONTRACTOR UNLESS OTHERWISE NOTED. ALL PRIMARY UTILITY CABLING SHALL BE INSTALLED BY THE RESPECTIVE UTILITY COMPANIES.

EXCAVATION AND BACKFILL

DO ALL EXCAVATION AND BACKFILLING NECESSARY FOR INSTALLATION OF WORK. PRIOR TO OPENING AN EXCAVATION, EFFORT SHALL BE MADE TO DETERMINE WHETHER UNDERGROUND INSTALLATIONS WILL BE ENCOUNTERED (I.E., TELE-COMMUNICATIONS, SEWER, WATER, FUEL, ELECTRIC LINES, ETC.), AND WHERE SUCH UNDERGROUND INSTALLATIONS ARE LOCATED, WHEN THE EXCAVATION APPROACHES THE ESTIMATED LOCATION OF SUCH INSTALLATIONS, THE EXACT LOCATION SHALL BE DETERMINED. WHEN IT IS UNCOVERED, PROPER SUPPORTS SHALL BE PROVIDED FOR THE EXISTING INSTALLATION. UTILITY COMPANIES SHALL BE CONTACTED AND ADVISED OF THE PROPOSED WORK PRIOR TO THE START OF ACTUAL EXCAVATION. CONTACT THE OHIO UTILITIES PROTECTION SERVICE 48 HOURS PRIOR TO STARTING WORK. TELEPHONE AT 1-800-362-2764.

UTILITY COMPANY CONTACTS

POWER COMPANY: THE ILLUMINATING COMPANY

REPRESENTATIVE: LORI VALENTINO PHONE: (440) 604-9958

LUMINAIRE SCHEDULE - SITE

SYMBOL	TYPE	MOUNTING	LUMENS	CCT	CRI	DRIVER(S) TYPE	DRIVER(S) QTY	WATTAGE	VOLTAGE	LUMINAIRE DESCRIPTION	ACCEPTABLE MANUFACTURERS	NOTES
☼	AX10	BOLLARD	1600	3000K	80	NON-DIMMING	1	30 W	277 V	10"ROUND x 32"HIGH BOLLARD WITH EXTRUDED ALUMINUM IMPACT RATED SECURITY BASE WITH 360 DEGREE DISTRIBUTED OPTICS IN ILLUMINATED CAP.	BEGA 99865 IMPACT TUBE 84623 KIM LIGHTING FORMS+SURFACES LIGMAN LITHONIA	1
○	AX11	BOLLARD	-	-	-	-	-	0 W	Other	10"ROUND x 32"HIGH BOLLARD WITH EXTRUDED ALUMINUM IMPACT RATED SECURITY BASE WITH NON-ILLUMINATED CAP.	BEGA 71128 IMPACT TUBE 84623 KIM LIGHTING FORMS+SURFACES LIGMAN LITHONIA	1
⊗	AX18	POLE	3126	3000K	80	CS30	1	30 W	277 V	20"W x 20"H POLE LUMINAIRE WITH DIE CAST ALUMINUM ALLOY HOUSING, TYPE III DISTRIBUTION WITH OPTICAL GRADE LENS, 30% SECURITY DIMMING WITH INTEGRAL MOTION SENSOR, AND CUSTOM COLOR FINISH. POLE SHALL BE 12' IN HEIGHT, ROUND ALUMINUM WITH MATCHING FINISH.	GARDCO PUREFORM POST TOP PPT-140L-650-WW-G2-T3-3-277-CS3 0-1MR13-PCB-F1-CC KIM LIGHTING STERNBERG FORMS+SURFACES LITHONIA	2
⊗	AX19	POLE	2910	3000K	80	CS30	1	30 W	277 V	20"W x 20"H POLE LUMINAIRE WITH DIE CAST ALUMINUM ALLOY HOUSING, TYPE V. DISTRIBUTION WITH OPTICAL GRADE LENS, 30% SECURITY DIMMING WITH INTEGRAL MOTION SENSOR. AND CUSTOM COLOR FINISH. POLE SHALL BE 12' IN HEIGHT, ROUND ALUMINUM WITH MATCHING FINISH.	GARDCO PUREFORM POST TOP PPT-140L-650-WW-G2-T3-5-277-CS3 0-1MR13-PCB-F1-CC KIM LIGHTING STERNBERG FORMS+SURFACES LITHONIA	2
□	AX20	POLE	5800	3000K	80	CS30	1	52 W	UNIV	32"L x 15"W x 6" DEEP LUMINAIRE WITH ALUMINUM HOUSING,TYPE III DISTRIBUTION, 30% SECURITY DIMMING WITH INTEGRAL MOTION SENSOR, AND CUSTOM FINISH. POLE SHALL BE 20' IN HEIGHT, SQUARE ALUMINUM WITH MATCHING FINISH.	GARDCO PUREFORM P26-140L-1150-WW-G2-AR-3-277-CS 30-IMR13-TLRPC POLE: MC-GRAW EDISON RTA, HAPCO, OR EQUIVALENT VISIONAIRE KIM LIGHTING	3
□	AX21	POLE	10,600	3000K	70	CS30	1	104 W	277 V	32"L x 15"W x 6" DEEP LUMINAIRE WITH ALUMINUM HOUSING, TYPE III DISTRIBUTION, 30% SECURITY DIMMING WITH INTEGRAL MOTION SENSOR. AND CUSTOM COLOR FINISH. POLE SHALL BE 20' IN HEIGHT, SQUARE ALUMINUM WITH MATCHING FINISH. LUMINAIRE AVAILABLE WITH INTEGRAL PHOTOCELL, AND INTEGRAL DIMMING FOR ASHRAE COMPLIANCE.	GARDCO PUREFORM P26-140L-1150-WW-G2-AR-3-277-CS 30-IMR13-TLRPC POLE: MC-GRAW EDISON RTA, HAPCO, OR EQUIVALENT VISIONAIRE KIM LIGHTING	4

SITE LUMINAIRE SCHEDULE NOTES:

1. IMPACT-RATED BOLLARD TO BE MOUNTED IN CONCRETE BASE PER MANUFACTURER INSTRUCTIONS.
2. LUMINAIRE TO BE MOUNTED TO 12FT ROUND ALUMINUM POLE.
3. LUMINAIRE TO BE MOUNTED TO 20FT TALL SQUARE POLE. INCLUDE "DYNADIMMER: AUTOMATIC PROFILE DIMMING". PROFILE TO BE SELECTED BY CLIENT.
4. LUMINAIRE TO BE MOUNTED TO 20FT TALL SQUARE POLE. TWO LUMINAIRES TO BE MOUNTED BACK-TO-BACK.

SCALE: 1" = 30'-0"
0 30' 60'

Code Consultant
P. R. SHERMAN, P.E.
P.O. BOX 216
ELKINS, NH 03233-0216
603-526-6190

Kitchen Consultant
RICCA DESIGN STUDIOS
515 WASHINGTON STREET
NORWELL, MA 02061
303-621-6327

Landscape Architect
STIMSON
288 NORFOLK STREET
CAMBRIDGE, MA 02139
617 876 8960

Civil Engineer
DONALD G. BOHNING & ASSOCIATES
7979 PUB PARKWAY
VALLEY VIEW, OH 44125
216-642-1130

Mechanical, Electrical, & Plumbing Engineer
KARPINSKI ENGINEERING
3135 EUCLID AVENUE
CLEVELAND, OH 44115
216-391-3700

Structural Engineer
GILSANZ MURRAY STEFICEK, LLP
129 WEST 27TH STREET
NEW YORK, NY 10001
212-254-0030

CENTERBROOK
Architects and Planners, LLP
67 Main Street
Post Office Box 955
Centerbrook, Connecticut 06409-0955
Telephone 860.767.0175
Facsimile 860.767.8719

STATE OF OHIO · BRIAN J. DAVID · E-61663 · REGISTERED PROFESSIONAL ENGINEER ©

THE PARK SYNAGOGUE
27500 SHAKER BOULEVARD
PEPPER PIKE, OHIO 44124

ISSUED:

No	Name	Date

PHASE:
SITE DEVELOPMENT PLAN APPROVAL

DRAWING NAME:
SITE ELECTRICAL PLAN

JOB #: 1721

© 2021 CENTERBROOK ARCHITECTS AND PLANNERS

DRAWN BY: SGB	DATE: 06/30/2021
CHECKED BY: DDW	SCALE:As indicated

SHEET:
ES1.00

\\Electric Scroll\Home\Users\SBlank\Documents\200009_MEP1_CENTRAL_SBlank126827.rvt

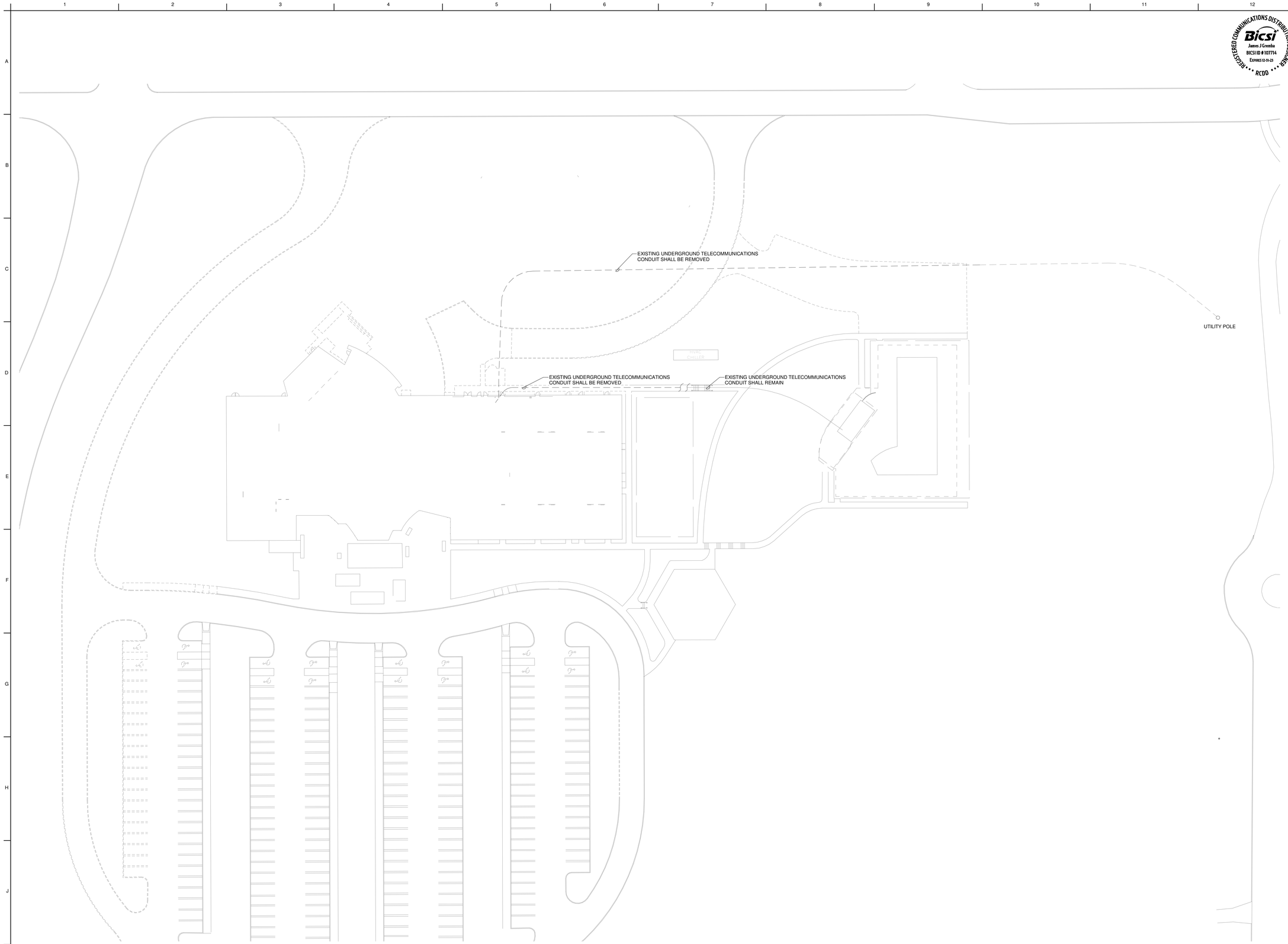

BICSI REGISTERED COMMUNICATIONS DISTRIBUTION DESIGNER
BICSI
James J Grenba
BICSI ID # 107714
EXPIRES 12-31-25
RCDD

Code Consultant
P. R. SHERMAN, P.E.
P.O. BOX 216
ELKINS, NH 03233-0216
603-526-6190

Kitchen Consultant
RICCA DESIGN STUDIOS
515 WASHINGTON STREET
NORWELL, MA 02061
303-621-6327

Landscape Architect
STIMSON
288 NORFOLK STREET
CAMBRIDGE, MA 02139
617 876 8960

Civil Engineer
DONALD G. BOHNING & ASSOCIATES
7979 PUB PARKWAY
VALLEY VIEW, OH 44125
216-642-1130

Mechanical, Electrical, & Plumbing Engineer
KARPINSKI ENGINEERING
3135 EUCLID AVENUE
CLEVELAND, OH 44115
216-391-3700

Structural Engineer
GILSANZ MURRAY STEFICEK, LLP
129 WEST 27TH STREET
NEW YORK, NY 10001
212-254-0030

CENTERBROOK
Architects and Planners, LLP
67 Main Street
Post Office Box 955
Centerbrook, Connecticut 06409-0955
Telephone 860.767.0175
Facsimile 860.767.8719

STATE OF OHIO
BRIAN J. DAVID
E-61665
REGISTERED PROFESSIONAL ENGINEER
©

THE PARK SYNAGOGUE
27500 SHAKER BOULEVARD
PEPPER PIKE, OHIO 44124

ISSUED:

No	Name	Date

PHASE:
SITE DEVELOPMENT PLAN APPROVAL

DRAWING NAME:
TECHNOLOGY SITE DEMOLITION PLAN

JOB #: 1721

© 2021 CENTERBROOK ARCHITECTS AND PLANNERS

DRAWN BY: AJS	DATE: 06/30/2021
CHECKED BY: JG	SCALE: 1" = 30'-0"

SHEET:
TS1.00D

I:\Archive Local\Active\Projects\pepperpike\Documents\p2000\05_MEP1_CENTRAL_AHeMolotsi1.rvt

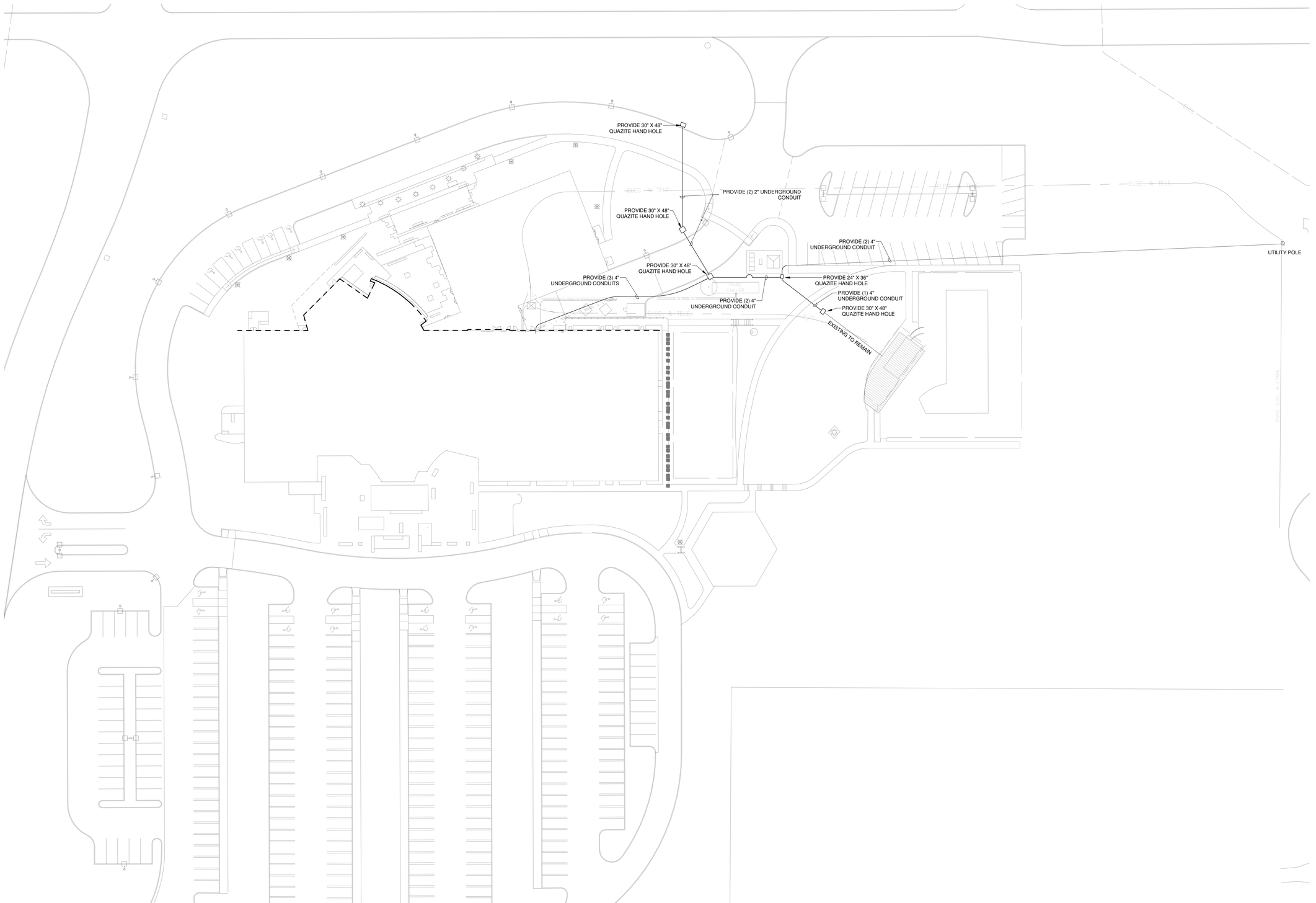

Code Consultant
P. R. SHERMAN, P.E.
P.O. BOX 216
ELKINS, NH 03233-0216
603-526-6190

Kitchen Consultant
RICCA DESIGN STUDIOS
515 WASHINGTON STREET
NORWELL, MA 02061
303-621-6327

Landscape Architect
STIMSON
288 NORFOLK STREET
CAMBRIDGE, MA 02139
617 876 8960

Civil Engineer
DONALD G. BOHNING & ASSOCIATES
7979 PUB PARKWAY
VALLEY VIEW, OH 44125
216-642-1130

Mechanical, Electrical, & Plumbing Engineer
KARPINSKI ENGINEERING
3135 EUCLID AVENUE
CLEVELAND, OH 44115
216-391-3700

Structural Engineer
GILSANZ MURRAY STEFICEK, LLP
129 WEST 27TH STREET
NEW YORK, NY 10001
212-254-0030

CENTERBROOK
Architects and Planners, LLP
67 Main Street
Post Office Box 955
Centerbrook, Connecticut 06409-0955
Telephone 860.767.0175
Facsimile 860.767.8719

STATE OF OHIO
BRIAN J. DAVID
E-61665
REGISTERED PROFESSIONAL ENGINEER
© 2021 CENTERBROOK ARCHITECTS AND PLANNERS

THE PARK SYNAGOGUE
27500 SHAKER BOULEVARD
PEPPER PIKE, OHIO 44124

ISSUED:

No	Name	Date

PHASE:
SITE DEVELOPMENT PLAN APPROVAL

DRAWING NAME:
TECHNOLOGY SITE PLAN

JOB #: 1721

DRAWN BY: AJS
CHECKED BY: JG
DATE: 06/30/2021
SCALE: 1" = 30'-0"

SHEET:
TS1.00

BICSI RCDD
James J Grenba
BICSI ID # 107714
EXPIRES 12-31-23

I:\Karp Vault Files\Users\aswitzer\Documents\20000_MEP_CENTRAL_aswitzer.rvt